HITACHI
Inspire the Next

Hitachi Hoists

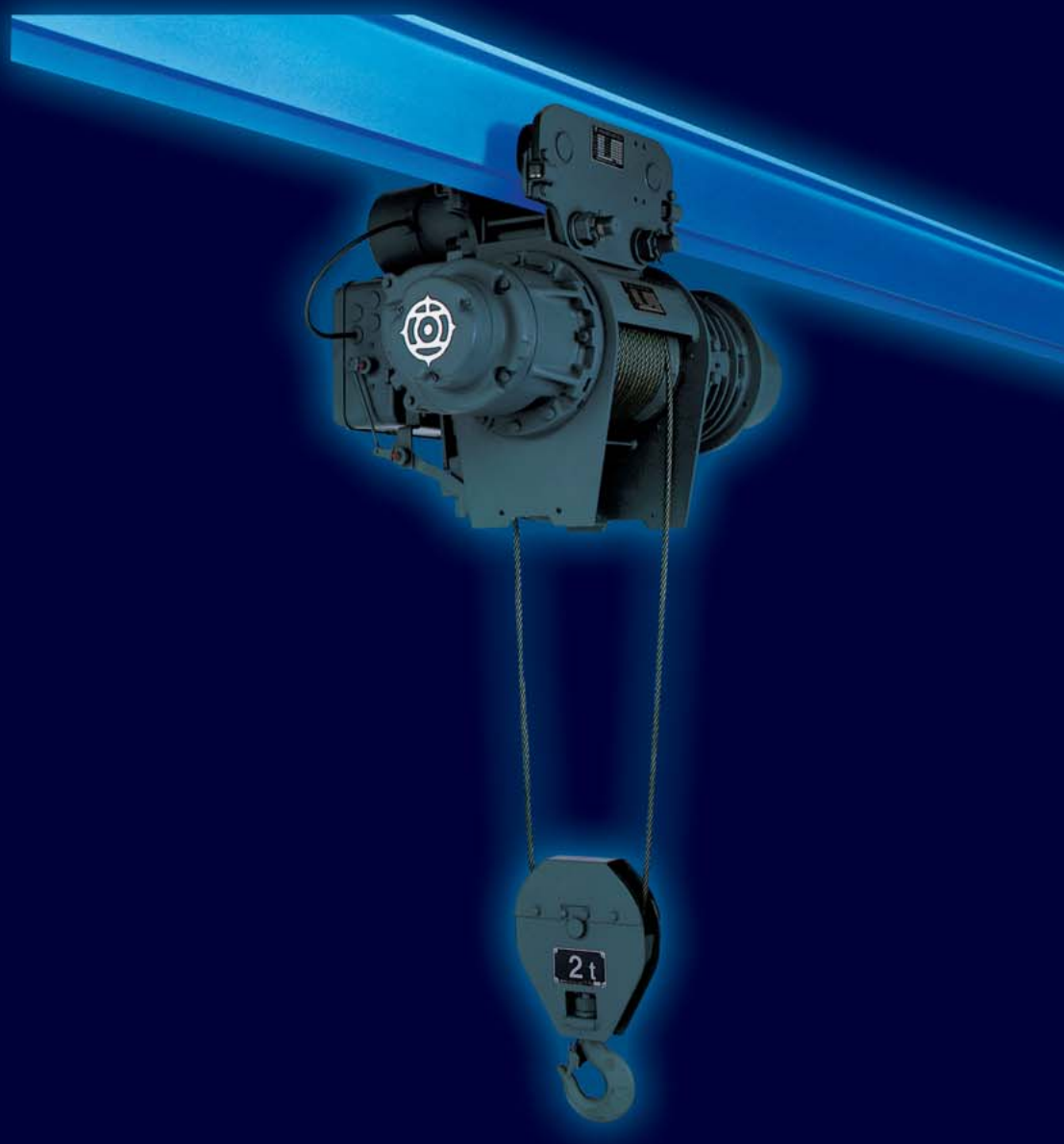

http://www.hitachi-ies.co.jp/english/products/hst/

From 0.5 to 30 tons, Hitachi Hoists V Series Take Up All Shapes of Load.

In 1927, Hitachi developed the nation's first rope hoist. Since then, we have improved the performance of our hoists, based on the design concept of more serviceable and reliable hoists, and achieved substantial results in various industry fields.
The V Series is the culmination of what we have been targeting all these years.
We offer a wide selection of hoists, including models for special uses in addition to standard models, and hoist accessories according to your needs and applications.
We could assist you in streamlining your material handling work, saving energy and improving efficiency with our hoists.

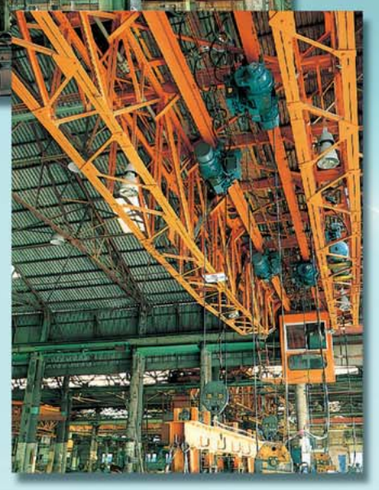

Hitachi Hoist Series Contents

- Introduction — 2

Outline

- Features — 4
- List of Hoist Types — 8
- Prior to Selecting the Hoist — 9

A-series

- Standard Headroom Type Hoist — 10
- Low Headroom Type Hoist — 12

V-series

- Standard Headroom Type Hoist — 14
- Low Headroom Type Hoist — 20
- Double-Rail Type Hoist — 22
- Stationary Type Hoist — 25
- Hoist with Creep Speed for Hoisting — 28

Others

- Ultra High Lift Type Hoist — 30
- Pair Hoist — 34
- Special Hoisting Speed Type Hoist, Special Traverse Speed Type Hoist — 36
- Special Specifications Hoist — 38
- Crane Saddles — 39
- Crane Saddle with Creep Speed — 42
- Wheel Unit for Toprun Type Saddle — 43
- Wheel Unit for Gantry Crane Saddle — 44
- Electrical Parts for Crane Saddle — 45
- For Installing the Hitachi Hoist — 46
- Standards and Applied Class to the Hitachi Hoists — 49

Do not use the hoist to lift or carry humans.
Hoists are designed to carry materials only.

Various Features Focusing on Safety and Maintainability Makes Hoists More Serviceable and Reliable.

1 Highly Reliable Braking System Unique to Hitachi

- The hoist detects the amount of lining abrasion. The brake is equipped with an automatic adjusting device to apply brake torque in proportion to the amount of lining abrasion.
- The double braking system consists of the main brake and the auxiliary brake unit

2 Hoisting Motor with a Thermal Protector

- The hoisting motor automatically stops when sensing the heat of the motor coil in order to protect the motor from burning damage caused by heat due to overwork.

3 Efficient Maintenance is Possible

- The starting time counter in the control box facilitates checking of the lifetime of consumable parts.
- The gear inspection window in the control box allows visual checks of the condition of the gear teeth surface and lubrication to some degree.
- The punch mark on the hook indicates the reference point for the hook inspection of deformation.
- The inspection of the rope end is easy.

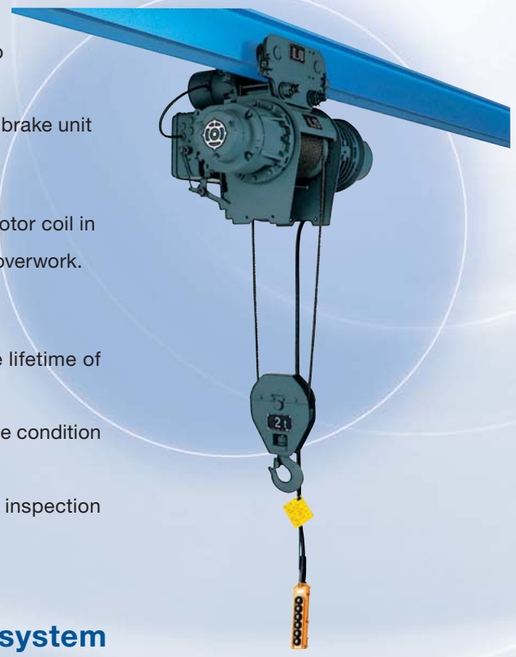

The Hitachi Hoist is composed of a rational system with unitized brake, motor, drum, reduction gear, and auxiliary brake.

*Disassembly and assembly are easy.

*Maintainability and serviceability are improved.

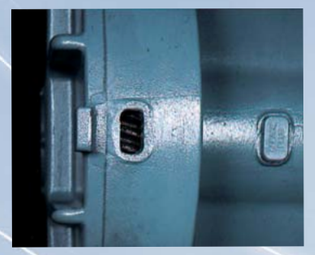

●GEAR INSPECTION WINDOW

Visual checks of the gear case teeth surface and lubrication conditions to some degree will improve inspection accuracy.

●REDUCTION GEAR UNIT

With a grease lubricating system, grease is filled in the gear unit on shipment, eliminating the replenishment prior to use, and prolonging the operation time. The building blocks of the spur gears (helical 1st stage) facilitate the maintenance inspection.

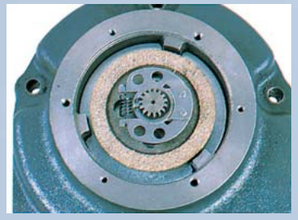

●AUXILIARY BRAKE UNIT

If the braking force of the main brake is reduced, the auxiliary brake unit, a new system with minimal impact, prevents the drop of the load. Together with the automatic brakes, it composes a double braking mechanism.

Auxiliary Brake Unit
Patent No. 1364105 (6 patents)
USA PAT No. 4216848

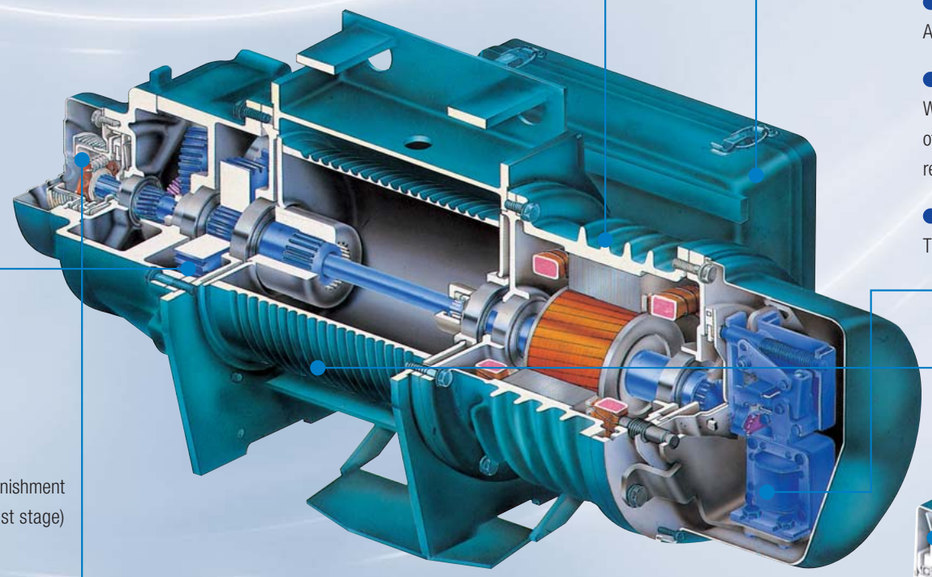

●Motor unit

Each hoist is equipped with a motor, which provides optimal starting torque for the hoist.
Employing cooling fans and large-capacity ball bearings, the class B insulating motor (class F for 7.5 and 10 tons) can withstand severe operating conditions. The hoisting motor is provided with a thermal protector, which senses the heat of the motor coil and functions to protect the motor from burning damage caused by over-frequent starting times.

Overheat alarm
Patent No. 39-886535

■ CONTROL BOX

●Starting time counter

The cumulative number of starting times is indicated on this counter. Because the total number of times the parts have been operated is known on this counter, it is useful for planning the maintenance and procurement of consumable parts such as brakes, electromagnetic switches, and wire ropes.

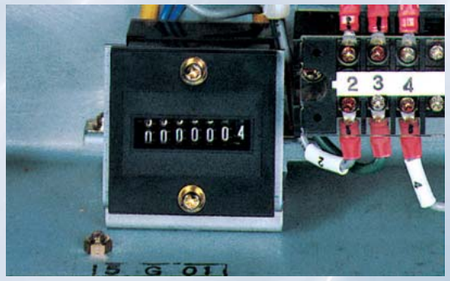

●Electromagnetic switch with mechanical interlock

A mechanical interlock is provided for the electromagnetic switch to prevent malfunction.

●Double-limit switch

When the load block has reached the upper limit, the control circuit of the electromagnetic switch is turned off and the operation is stopped. Should a short-circuit occur, or the main circuit continue to operate due to a reverse phase connection, causing the load block to move further upward, the motor main circuit is cut off.

●Clamp type cover

The clamp type control box cover facilitates opening and closing.

●Brake unit

The brake is equipped with an automatic adjusting device, which automatically adjusts brake torque in proportion to the amount of lining abrasion. Conventional adjustments of the brake will not be required.

Brake Unit with Automatic Adjusting Device
Patent No. 899967 (5 patents)
USA PAT No. 3908802, Germany PAT No. 2354044

■ STEEL DRUM and SHEAVE

The drums (2- and 4-fall models for 2 to 5 tons, except for ultra high lift hoists) and sheaves (except for 7.5 and 10 tons) are made of steel plate, and the grooves are processed by a special press method. This makes the life of the drums and sheaves about three times longer than existing cast metal ones (compared with our products).

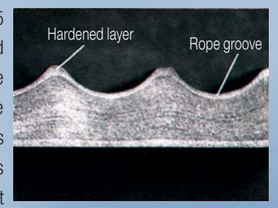

Steel plate rolling groove forming method
Patent No. 1072752

●Reduction in size and weight

The K size, from the road surface of the traverse rail to the top surface of the double rail hoist, is reduced by 20% and weight is reduced by 10% (compared with our conventional products). This downsizing improves installation and operability.

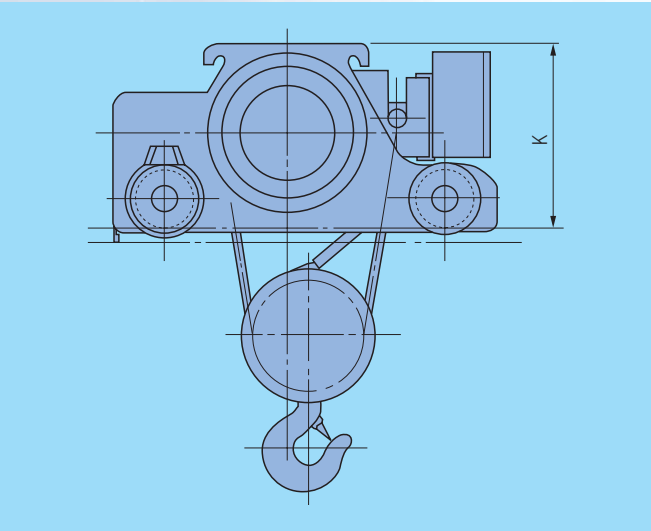

■ Thick Wire Rope

The wire rope provided with a sufficient margin features a long life.

●Rope end

Inspection of the rope end has become much easier.

(1/2 to 3 tons for the 2-fall type: Patent No. 1475393)

■ Hook

●Punch mark

The punch mark on the hook indicates the reference point for easy inspection of deformation.

●Load block fitted with a safety lever

The load block is provided with a safety lever to prevent the rope from dislodging in addition to a safety cover.

●Integrated pushbutton cable

The pushbutton cable unique to Hitachi integrates the cable and protective wire into a single assembly to improve durability and operability.

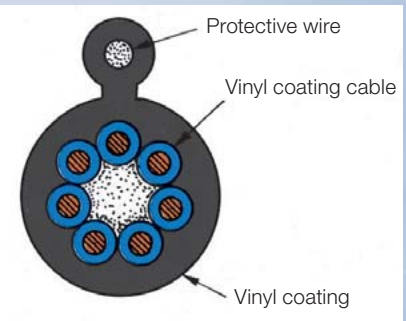

●User-friendly pushbutton

The plastic push button is of a totally enclosed type.

Motorized trolley

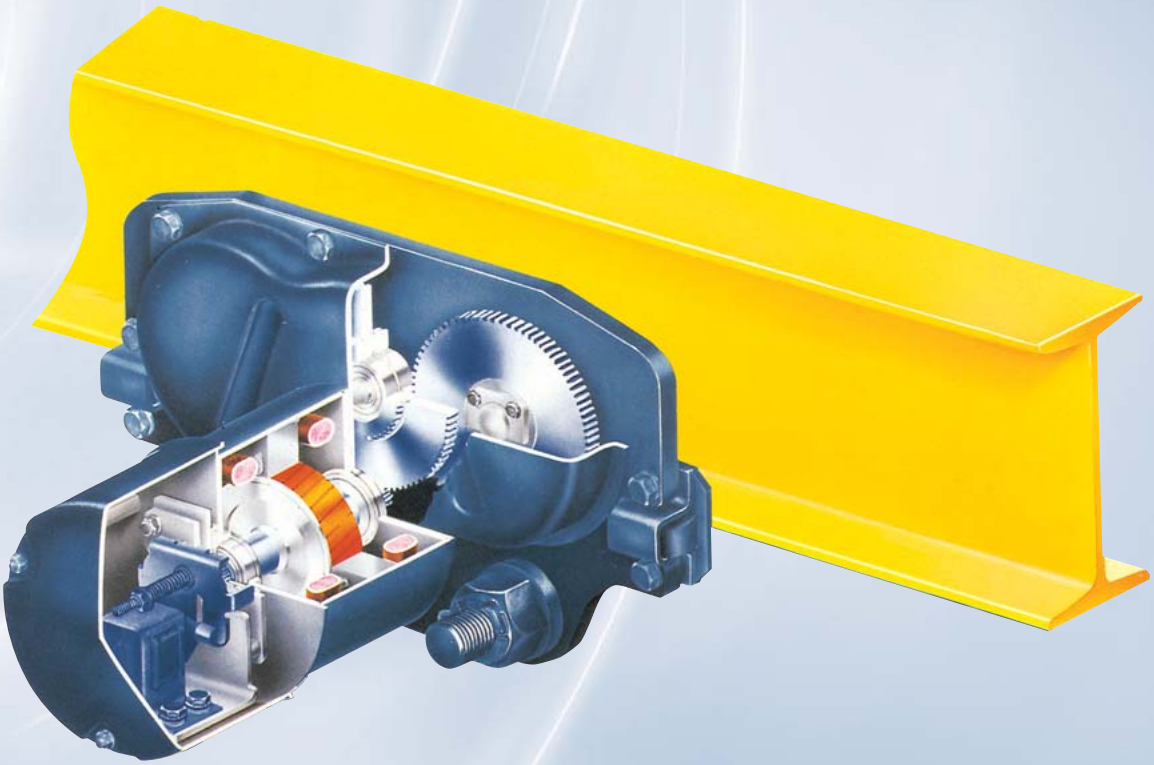

●Long life wheel

The hoist traverses by guide rollers and the flangeless wheels remarkably reduce the wear of the I-beam and wheels. The built-in brake facilitates positioning. The brake torque is adjustable.

Besides the standard and low headroom types, wheels of the double rail type (2 to 5 tons) are quenched, prolonging the lifetime more than 2.5 times that of conventional hoists (compared with our products).

●Self-adjusting center core (Double rail hoist)

Using a trolley with a self-adjusting center core, the wheels can closely follow the rails.

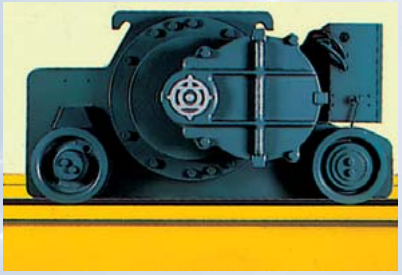

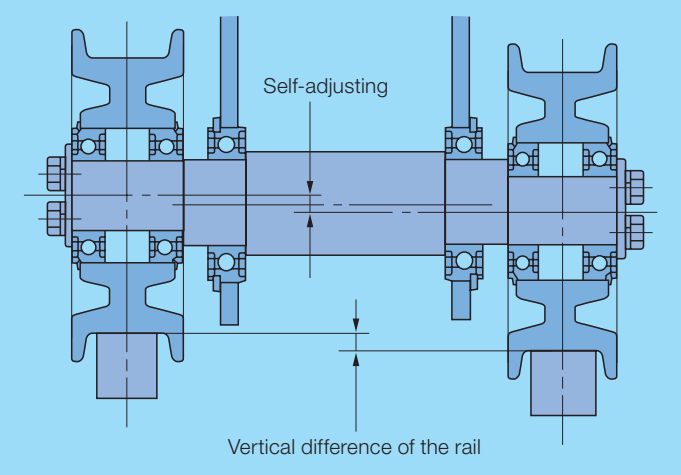

Optimum model Selectable from a Great Variety of Types

A-series		V-series		
Standard Headroom	Low Headroom	Standard Headroom	Low Headroom	Double-Rail
		1/2t 6m,12m	1/2t 6m	
1t 6m,12m	1t 6m	1t 6m,12m	1t 6m,12m	
2t 6m,12m	2t 6m	2t 6m,12m	2t 6m,12m	2t 12m
3t 6m,12m	3t 6m	3t 6m,12m	3t 6m,12m	3t 6m,12m
		5t 8m,12m	5t 6m	5t 8m,12m
		7.5t 8m,12m		7.5t 8m,12m
		10t 8m,12m		10t 8m,12m
		15t 8m,12m		15t 8m,12m
		20t 12m		20t 12m
				30t 12m

Specially designed hoists

- Stationary
- Hoist with creep speed for hoisting
- Ultra high lift type hoist
- Pair hoist
- Special hoisting speed type hoist
- Special traversing speed type hoist
- Explosionproof type hoist based on JIS
- Multi hook type hoist
- Hoist with upper / lower limit switches
- Hoist with load limiter

Prior to Selecting Hoist

Explanation of Hitachi hoist types for hoist with trolley

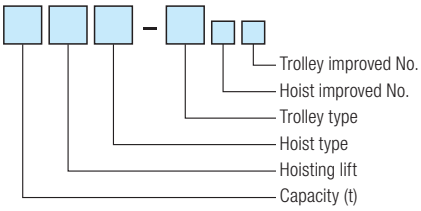

For hoist only

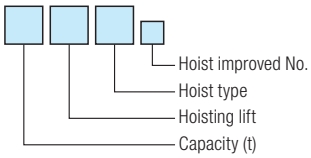

Capacity	Hoisting lift		Hoist type	Trolley type
	Low lift	High lift		
Rated load indicated by tons	No mark	H	V-series Standard headroom type·····M Low headroom type·····L Double rail type···D A-series Standard headroom type·····AM Low headroom type·····AL	Manual driven trolley·····P Chain driven trolley·····C Motorized trolley·····T

* Serial numbers are applied to improved No.

Example

V-series, 2t, high-lift, standard headroom type hoist with motorized trolley

2 H M – T 7 5

Standard specifications

Specifications

- Control Voltage
  200V for V-series, 24V for A-series
- Operating method
  Push-button operation using a control panel on the floor
- Rating
  30 minutes (to JIS C9620, Japanese Industrial Standard)

Standard push-buttons

Type	No. of push buttons	Indication
Without Motorized Trolley	2	↑↓
With Motorized Trolley Except 5t Double Rail Type (up to 5t)	6	↑↓←→↗↙
With Motorized Trolley Incude 5t Double Rail Type (7.5t and up)	8	ON OFF ↑↓←→↗↙

Power feed system

Type	Power feed system
Suspension-type with chain-driven trolley	Cable
With motorized trolley	Cable

* No cable is provided in the cable power feed system.

Series Selection

When selecting an electric chain hoist, the operating environment, operating time, and operating frequency must be taken into consideration.

Operating time and load ratio

Use within the range of ▭ section.

Load Condition	Load Ratio	Mean operating hour per day (h)					
		~1	~2	~4	~8	~16	16~
Light	K≦0.5	V-series 40% ED (40%ED) 400 Stars/h (250 Stars/h)					
Medium	0.5<K≦0.63						
Heavy	0.63<K≦0.8	A-series 25% ED 250 Stars/h					
Severe	0.8<K						

Load condition
Light : This is normally used at a load of 1/2 the rated load, and on rare occasions at the rated load.
Medium : This is normally used at a load of 1/2 to 2/3 the rated load, and occasionally at the rated load.
Heavy : This is normally used at loads above 2/3 the rated load, and often at the rated load.
Severe : This is mostly used at the rated load or close to this load.

* If use is expected to exceed the above range, then an electric chain hoist with a higher capacity must be selected, so please consult with HITACHI.
** Rating in parenthesis is for 15t and above.

Operating environment

- Use in locations with an ambient temperature of −10°C to 40°C (with no freezing) and humidity of 90% or less (no condensation).

Protective construction IP44

Applicable standards

JIS C9620 (Electic Hoist) and crane construction standards

- The main body and the trolley for a hoist with a chain-driven trolley are delivered separately.

n : Inching count (times) per lifting or lowering operation.
N : Transport count (times) within 1 hour
ℓ : Lift(m)
V : Hoisting speed(m/min)

t_1, t_2, t_3 ·····:
Ratio of the operating time of each load to the total operating time

P_1, P_2, P_3 ·····:
Each load ratio (ratio of the load to each rated load)

In addition to the general specifications, (1) starting frequency, (2) duty factor, and (3) load ratio must be taken into consideration.

- Calculation method
  (If the calculated value exceeds the standard specification, then it is a dedicated specification.)

(1) Max. starting frequency α (Starts/h)=2×n×N

- Example calculation
  The starting frequency is the cumulative sum of the inching operation count, so this must be calculated by estimating the number of inchings per hoist round trip.

$$2\times3\times25=150\text{Starts/h}$$

Lifting+Lowering (Number of times) — No. of transfer per hour (times) — Inching count (times) per lifting or lowering operation.

(2) Duty factor β(%)= $\dfrac{\text{The total motor ON time (minutes) per hour under the most frequent condition.}}{60\text{ min}}\times100$

$$=2\times\frac{\ell}{V}\times N\times\frac{1}{60\text{ min}}\times100$$

- Example calculation

Lift(m) — No. of transfer per hour(Times)

$$2\times\frac{3}{10}\times25\div60\times100=25\%$$

Lifting+Lowering (Times) — Hoisting speed (m/min) — 1 hour (60 min)

(3) Load ratio $K=\sqrt[3]{P_1^3t_1+P_2^3t_2+P_3^3t_3+\cdots\cdots}$

- Example calculation
  When a 0.4t load is suspended on a 1-ton rated load rope hoist for a one-way trip, with a no-load return trip. (The lifting sling is 0.3t).

$$K=\sqrt[3]{(0.3+0.4)^3\times0.5+0.3^3\times0.5}\fallingdotseq0.57$$

In this case, the load condition is comparable to "medium" and the average operating time per day is 8 hours or less. If used for a longer time than this, an electric chain hoist with a higher capacity must be selected.

A-series HOIST with Motorized Trolley

Standard Headroom Type Hoist

(With suspension/chain-driven and motorized trolley)

This is an orthodox type of hoist widely utilized for general purposes. It boasts high performance for use in rugged jobs such as general production in factories, mining, railroads, and warehouses.

Standard - Headroom Type Hoist

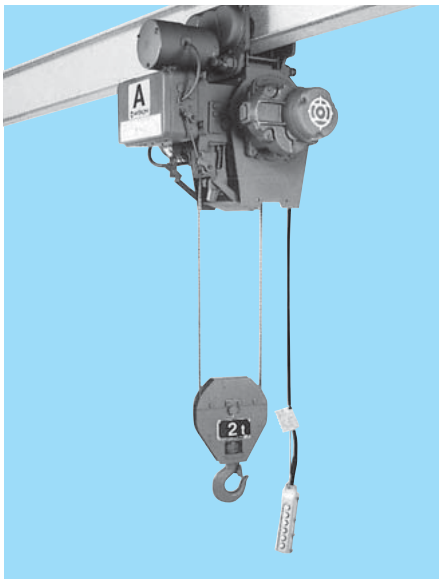

Specifications

Capacity (t)				1	2	3
Hoisting lift (m)				6 and 12		
Hoisting	Speed (m/min)		50Hz	7	6	5
			60Hz	8.4	7	6
	Motor	(kW)	50Hz	1.2	2.1	2.6
			60Hz	1.5	2.4	3.1
		No. of poles		4		
Traversing	Speed (m/min)		50Hz	21		
			60Hz	25		
	Motor	(kW)	50Hz	0.30	0.30	0.45
			60Hz	0.36	0.36	0.55
		No. of poles		4		
Wire rope	No. of falls			2		
	Composition			6×Fi (29)-B		
	Diam. (mm)			ϕ8	ϕ11.2	ϕ14
Rating				25% ED 250 Starts/h		
Operating method				Floor-controlled Pushbutton operation		
Electric source (3 phase)				200V 50/60Hz,220V 60Hz,380-400V 50Hz,415V 50Hz,440-460V 60Hz		
Control voltage (V)				24 — 27		

Dimensions

Suspension Type Hoist

1t

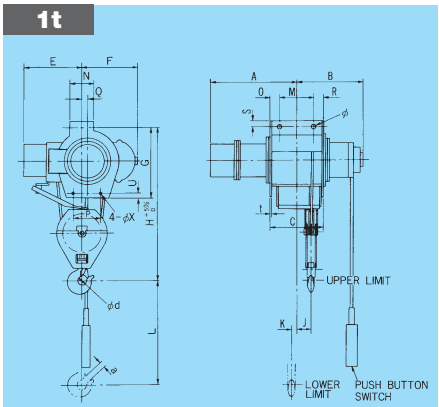

2, 3t

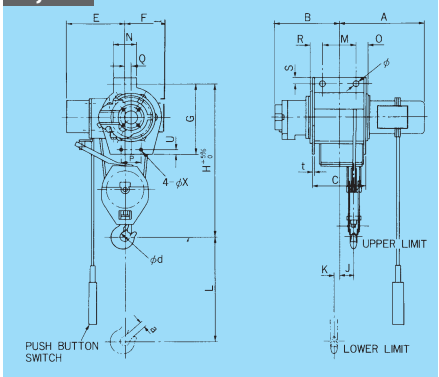

Table of Dimensions

Model		1AM6	1HAM6	2AM7	2HAM7	3AM6	3HAM6
Capacity (t)		1		2		3	
Approx. dimensions (mm)	L	6,000	12,000	6,000	12,000	6,000	12,000
	H	710		910		1,050	
	A	480	650	545	580	565	605
	B	350	385	435	615	460	640
	M	200		200		200	
	ϕ	26		36		36	
	N	139		139		164	
	E	345		400		460	
	F	255		220		245	
	ϕd	45		56		71	
	a	23		36		42	
	J	85	115	75	100	80	110
	K	20	90	30	110	35	120
	O	47	217	56	91	65	106
	R	47	80	58	237	79	262
	Q	32.5		35.5		41.5	
	S	35	40	35		35	
	C	294	497	314	528	344	568
	t	9		9		9	
	G	390		500		555	
	P	120		120		180	
	U	28		28		35	
	ϕX	10		10		14	
Approx. weight (kg)		115	125	190	210	230	255
Push-button indication				↑	↓		

Standard Headroom Type Hoist

Dimensions Standard-Headroom Type with Motorized Trolley

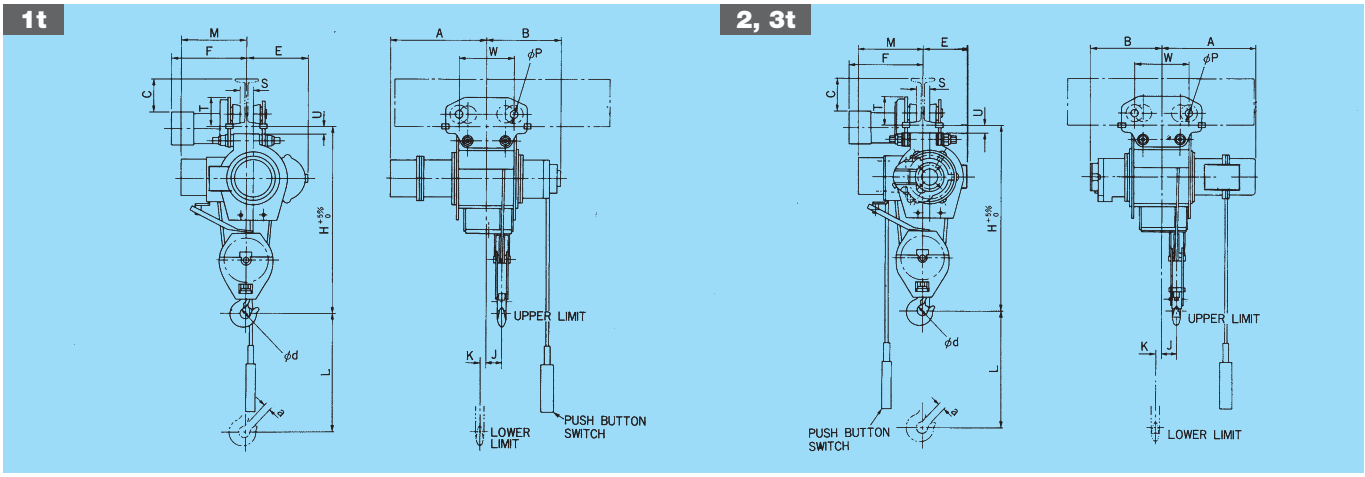

Table of Dimensions

Model		1AM-T65		1HAM-T65		2AM-T75		2HAM-T75		3AM-T65		3HAM-T65	
Hoist type		1AM6		1HAM6		2AM7		2HAM7		3AM6		3HAM6	
Trolley type		1T5		1T5		2T5		2T5		3T5		3T5	
Capacity (t)		1				2				3			
Approx. dimensions (mm)	L	6,000		12,000		6,000		12,000		6,000		12,000	
	H	790				985				1,115			
	A	480		650		545		580		565		605	
	B	350		385		435		615		460		640	
	M	345				400				460			
	W	200/290				200/290				230/310			
	K	20		90		30		110		35		120	
	J	85		115		75		100		80		110	
	E	255				220				245			
	φd	45				56				71			
	φp	96				96				128			
	a	23				36				42			
Min. curve Radius (m)		1.5				1.8				2.0			
Dimensions (mm) / I- Beam		F	S	T	U	C	F	S	T	U	C	F	S	T	U	C
200×100×7		374	42	148	47 (42)	135	378	42	148	42	135					
250×125×7.5		387	67	151	44 (39)	185	391	67	151	39	185	417	52	177	38	180
300×150×11.5		400	92	160	35 (30)	225	404	92	160	30	225	430	77	187	28	220
450×175×11												443	102	185	30	370
Approx. weight (kg)		165		175		255		275		320		345	
Push-button indication		↑	↓	←	→	↗	↙						

NOTES : 1.Dimensions W are for the drive side/driven side.
2.Unless otherwise specified trolley is being assembled so as to meet smudged I-beam size.
3.( ) dimensions represent dimensions of 1HAM6 (Hoist type)

Low Headroom Type Hoist

Low-Headroom Type Hoist

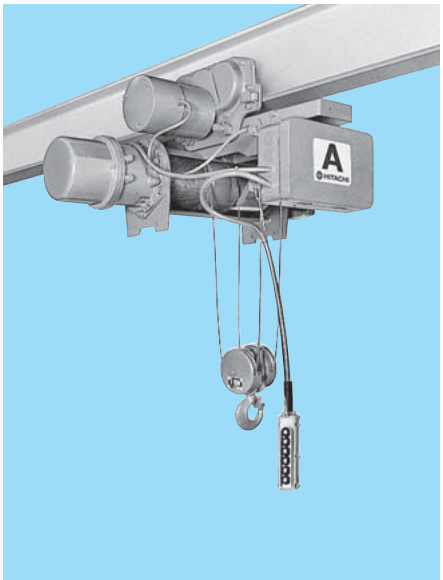

Specifications

Capacity (t)				1	2	3
Hoisting lift (m)				6		
Hoisting	Speed (m/min)		50Hz	7	6	5
			60Hz	8.4	7	6
	Motor	(kW)	50Hz	1.2	2.1	2.6
			60Hz	1.5	2.4	3.1
		No. of poles		4		
Traversing	Speed (m/min)		50Hz	21		
			60Hz	25		
	Motor	(kW)	50Hz	0.30	0.30	0.45
			60Hz	0.36	0.36	0.55
		No. of poles		4		
Wire rope	No. of falls			4		
	Composition			6×W (19)-B	6×Fi (29)-B	
	Diam. (mm)			ϕ6.3	ϕ8	ϕ10
Rating				25% ED 250 Starts/h		
Operating method				Floor-controlled Pushbutton operation		
Electric source (3 phase)				200V 50/60Hz,220V 60Hz,380-400V 50Hz,415V 50Hz,440-460V 60Hz		
Control voltage (V)				24 — 27		

Low Headroom Type Hoist

Dimensions

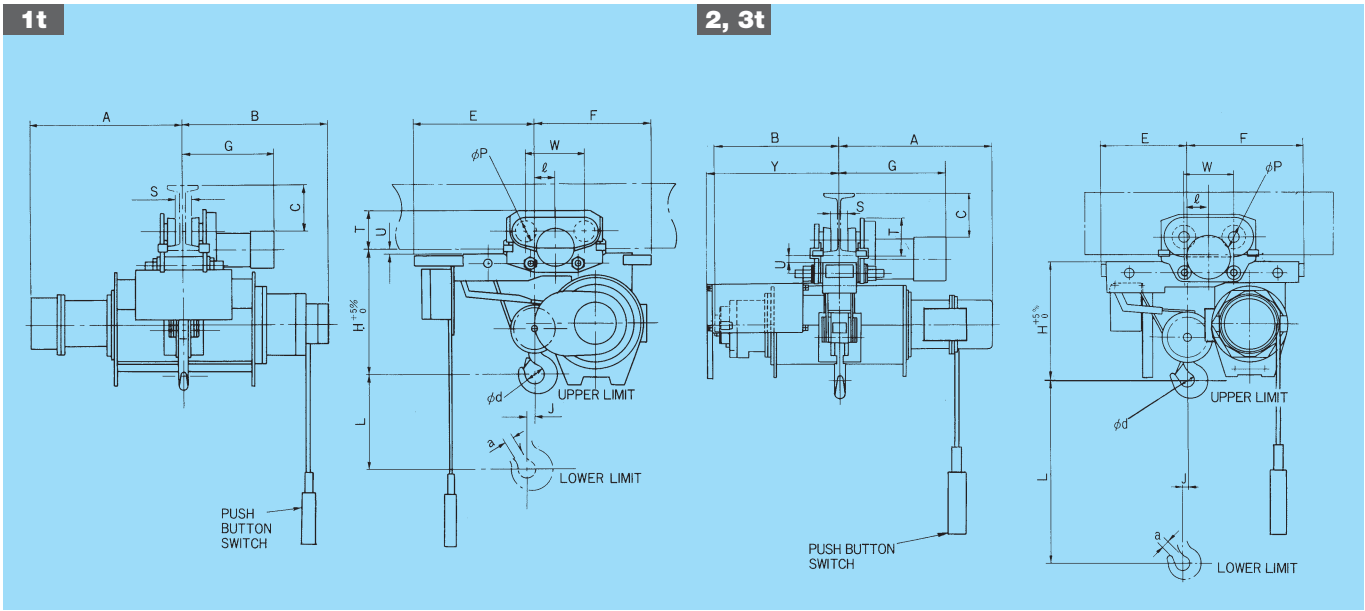

Table of Dimensions

Model		1AL-T55					2AL-T55					3AL-T55				
Hoist type		1AL5					2AL5					3AL5				
Trolley type		1T5					2T5					3T5				
Capacity (t)		1					2					3				
Approx. dimensions (mm)	L	6,000					6,000					6,000				
	H	425					515					600				
	A	600					655					705				
	B	475					545					585				
	W	200/290					200/290					230/310				
	E	420					365					400				
	F	375					480					575				
	φd	45					56					71				
	J	28					42					46				
	Y	—					625					620				
	φp	96					96					128				
	a	23					36					42				
	ℓ	55					85					100				
Min. curve Radius (m)		1.5					1.8					2.0				
Dimensions (mm) / I- Beam		S	T	U	C	G	S	T	U	C	G	S	T	U	C	G
200×100×7		42	148	52	135	374	42	150	32	135	378					
250×125×7.5		67	151	49	185	387	67	153	29	185	391	52	177	28	180	417
300×150×11.5		92	160	40	225	400	92	163	19	225	404	77	187	18	220	430
450×175×11												102	185	20	370	443
Approx. weight (kg)		180					270					370				
Push-button indication																

NOTE : Dimensions W are for the drive side/driven side.
Unless otherwise specified trolley is being assembled so as to meet smudged I-beam size.

V-series HOIST with Motorized Trolley

Standard Headroom Type Hoist

(With suspension/chain-driven and motorized trolley)

This is an orthodox type of hoist widely utilized for general purposes. It boasts high performance for use in rugged jobs such as general production in factories, mining, railroads, and warehouses.

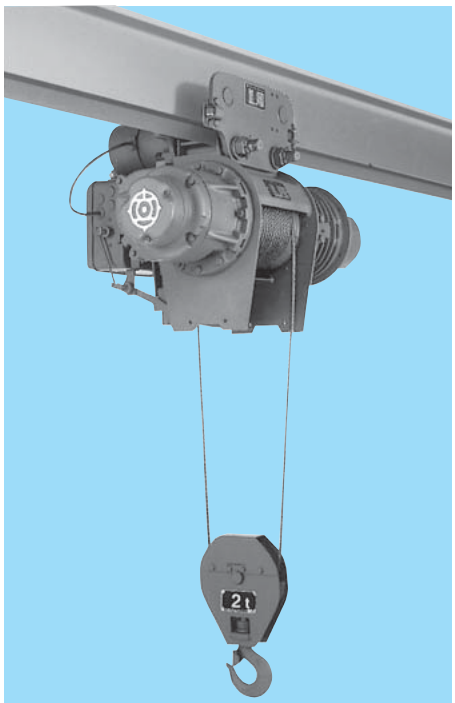

Specifications

Capacity (t)				1/2	1	2	3	5	7.5	10	15	20
Hoisting lift (m)				6 and 12				8 and 12				12
Hoisting	Speed (m/min)		50Hz	11	11	8.4	7.5	6.7	6.0	5.0	5.0	4.2
			60Hz	13	13	10	9	8	7.2	6.0	6.0	5.0
	Motor	(kW)	50Hz	1.0	1.9	2.9	4.2	5.9	7.9	8.8	6.7×2	7.5×2
			60Hz	1.2	2.3	3.5	5	7	9.5	10.5	8×2	9×2
		No.of poles		4					4			
Traversing	Speed (m/min)		50Hz	21					14			
			60Hz	25					17			
	Motor	(kW)	50Hz	0.30	0.30	0.30	0.45	0.63	0.47×2	0.47×2	0.7×2	0.7×2
			60Hz	0.36	0.36	0.36	0.55	0.75	0.56×2	0.56×2	0.84×2	0.84×2
		No.of poles		4					6		4	
Wire rope	No.of falls			2				4				
	Composition			6×W(19)-B	6×Fi(29)-B							6×Fi(29)IWRC-B
	Diam.(mm)			ϕ6.3	ϕ8	ϕ11.2	ϕ14	ϕ12.5	ϕ14	ϕ16	ϕ20	ϕ22.4
Rating				40%ED400 Starts/h							40%ED250 Starts/h	
Operating method				Push-button operation ↑↓←→↗↙					Push-button operation ON OFF ↑↓←→↗↙			
Electric scurce (3 phase)				200V 50/60Hz,220V 60Hz,380-400V 50Hz,415V 50Hz,440-460V 60Hz								
Control voltage				200V 50/60Hz								

Hoist with Motorized Trolley

Here's Convenience

This hoist proves handy for use in a busy factory where the load traveling range is wide and transporating operatings are frequent. The motorized trolley efficiently transports loads to destined locations. When the rail is installed the full length or width of a building' s ceiling, the hoist may be used as an overhead traveling crane. Loads can be speedily transported merely by manipulating the push-button switches. Several hoist units can be mounted on one rail.

Dimensions

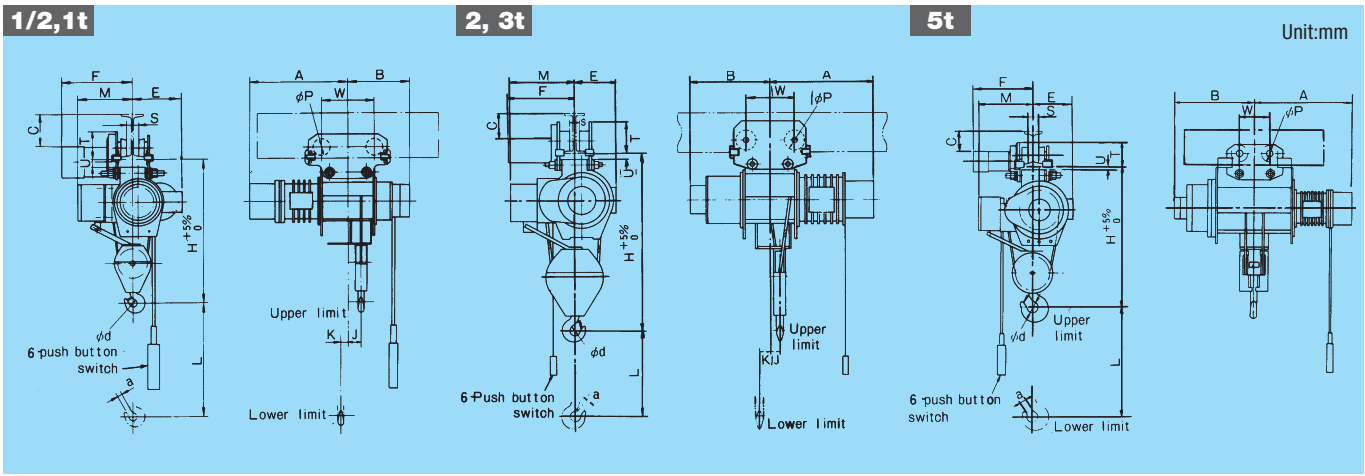

Table of Dimensions

Model		1/2M-T65	1/2HM-T65	1M-T65	1HM-T65	2M-T75	2HM-T75	3M-T65	3HM-T65	5M-T55	5HM-T55
Hoist type		1/2M6	1/2HM6	1M6	1HM6	2M7	2HM7	3M6	3HM6	5M5	5HM5
Trolley type		1/2T5	1/2T5	1T5	1T5	2T5	2T5	3T5	3T5	5T5	5T5
Capacity (t)		1/2		1		2		3		5	
Approx. dimensions (mm)	L	6,000	12,000	6,000	12,000	6,000	12,000	6,000	12,000	8,000	12,000
	H	740		790		985		1,115		1,190	
	A	485	655	545	715	595	630	645	690	845	955
	B	355	380	350	385	435	615	475	660	690	800
	M	335		345		415		460		455	
	W	200/290		200/290		200/290		230/310		250/330	
	K	20	100	20	90	30	110	35	120	–	–
	J	80	105	85	115	75	100	80	110	–	–
	ϕd	40		45		56		71		90	
	ϕp	96		96		96		128		156/140(DRIVE SIDE/DRIVEN SIDE)	
	a	21		23		36		42		58	
Min. curve radius (m)		1.3(5.0)		1.5		1.8		2.0		3.0	

Dimensions with respect to I-beam	1/2M-T65						1/2HM-T65						1M-T65						1HM-T65						2M-T75						2HM-T75						3M-T65						3HM-T65						5M-T55						5HM-T55					
	E	F	S	T	U	C	E	F	S	T	U	C	E	F	S	T	U	C	E	F	S	T	U	C	E	F	S	T	U	C	E	F	S	T	U	C	E	F	S	T	U	C	E	F	S	T	U	C	E	F	S	T	U	C	E	F	S	T	U	C
(150×75×5.5)	190	361	17	147	53 (43)	85																																																						
200×100×7	190	374	42	148	52 (42)	135	255	374	42	148	47 (42)	135	220	378	42	148	42	135																																									
250×125×7.5	190	387	67	151	49 (39)	185	255	387	67	151	44 (39)	185	220	391	67	151	39	185	245	417	52	177	38	180																																			
300×150×11.5							255	400	92	160	35 (30)	225	220	404	92	160	30	225	245	430	77	187	28	220	305	450	77	225	30	215																															
450×175×11																			245	443	102	185	30	370	305	463	102	223	32	365																														
Approx. weight (kg)	145			155			175			195			280			310			385			415			685			745																															

NOTES : 1. Dimensions W represent dimensions of drive side/driven side.
2. 1/2 ton-When an I-beam (150×75×5.5) is used, the minimum curve radius is 5m.
3. 1/2 ton-When an I-beam (150×75×5.5) is used, 50mm-thick shims are necessary between the building and the I-beam.
4. Unless otherwise specified trolley is being assembled so as to meet smudged I-beam size.
5. ( ) dimensions represent dimensions of 1/2HM6 and 1HM6 (Hoist type)

Hoist with Motorized Trolley

Dimensions

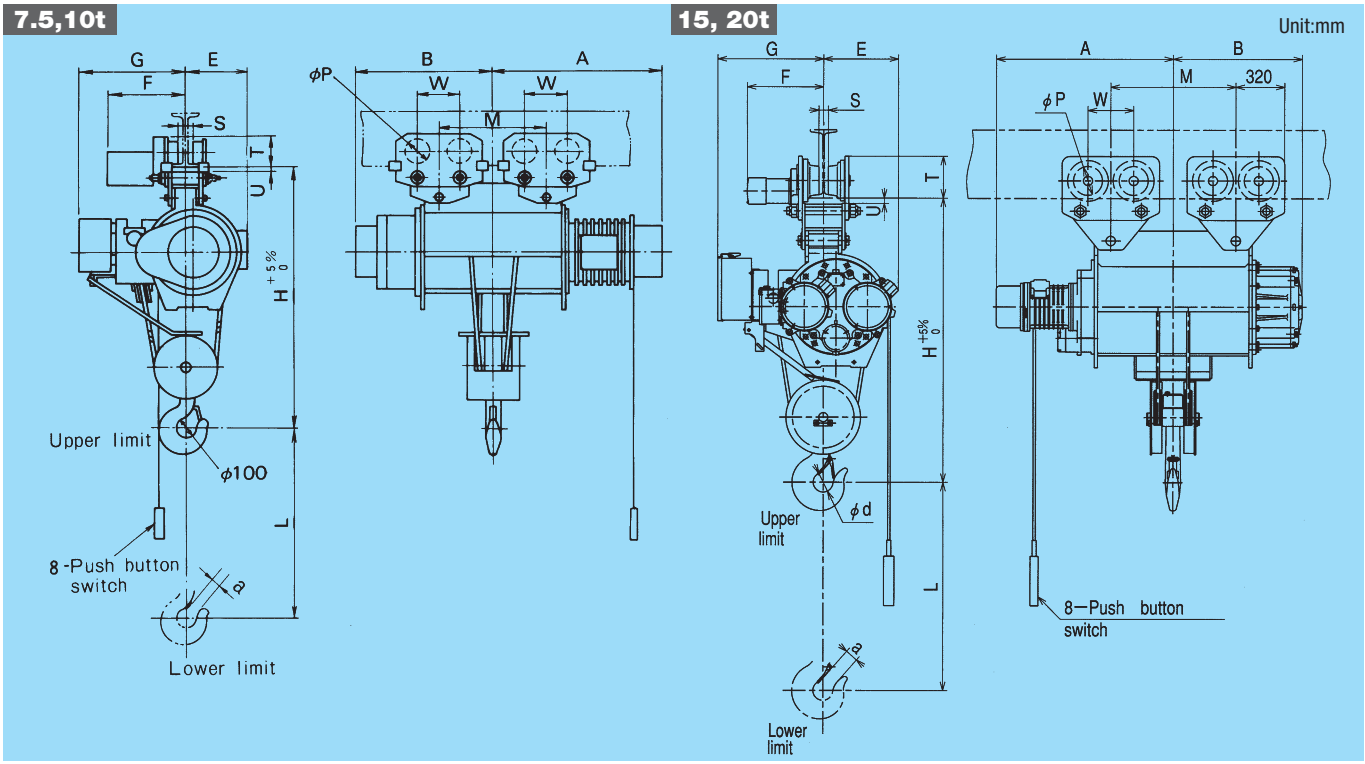

Table of Dimensions

Model		7.5M-T55		7.5HM-T55		10M-T55		10HM-T55		15M-T55		15HM-T55		20HM-T55
Hoist type		7.5M5		7.5HM5		10M5		10HM5		15M5		15HM5		20HM5
Trolley type		4FT5×2		4FT5×2		5FT5×2		5FT5×2		10AT5×2		10AT5×2		10AT5×2
Capacity (t)		7.5				10				15				20
Approx. dimensions (mm)	L	8,000		12,000		8,000		12,000		8,000		12,000		12,000
	H	1,345				1,515				1,865				2,010
	A	1,075		1,150		1,075		1,150		1,060		1,160		1,210
	B	830		905		885		960		750		850		900
	E	315				355				500				500
	G	570				590				705				705
	M	560		760		650		786		820				900
	W	230/310(Drive side/Driven side)				230/330(Drive side/Driven side)				300				300
	φd	100				100				130				165
	φp	128				156/140(Drive side/Driven side)				190				190
	a	69				69				86				108
Min. curve Radius (m)		Straight				Straight				Straight				Straight
Dimensions with respect to I-beam		S	T	U	F	S	T	U	F	S	T	U		F
450×175×11		102	184	30	453	102	225	30	460	62	280	30		524
600×190×13		117	189	25	461	117	230	25	468	77	285	25		532
Approx. weight (kg)		930		990		1,230		1,290		2,340		2,540		2,940

NOTE : Unless otherwise specified trolley is being assembled so as to meet smudged I-beam size.

Lug Suspension Type Hoist

Here's Convenience...

This hoist is handy when hoisting or lowering cargo in a definite location. Transportation of the hoist main body, installation to the ceiling, and hoist removing are quite simple.

Dimensions

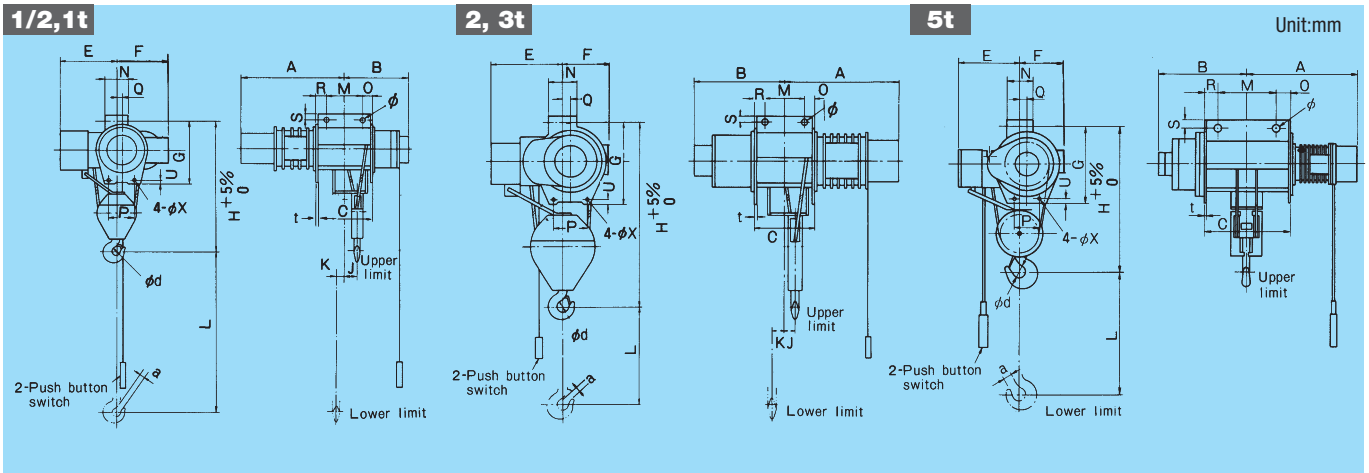

Table of Dimensions

Model		1/2M6	1/2HM6	1M6	1HM6	2M7	2HM7	3M6	3HM6	5M5	5HM5
Capacity (t)		1/2		1		2		3		5	
Approx. dimensions (mm)	L	6,000	12,000	6,000	12,000	6,000	12,000	6,000	12,000	8,000	12,000
	H	660		710		910		1,050		1,110	
	A	485	655	545	715	595	630	645	690	845	955
	B	355	380	350	385	435	615	475	660	690	800
	M	200		200		200		200		270	
	ϕ	26		26		36		36		46	
	N	114		139		139		164		189	
	E	335		345		415		460		455	
	F	190		255		220		245		305	
	ϕd	40		45		56		71		90	
	a	21		23		36		42		58	
	J	80	105	85	115	75	100	80	110	—	—
	K	20	100	20	90	30	110	35	120	—	—
	O	52	80	47	80	56	91	65	106	198	310
	R	52	230	47	217	58	237	79	262	198	310
	Q	25.5		32.5		35.5		41.5		52.5	
	S	30	40	35	40	35		35		50	
	C	304	510	294	497	314	528	344	568	666	890
	t	9		9		9		9		12	
	G	380		390		500		555		590	
	P	120		120		120		180		180	
	U	28		28		28		35		35	
	ϕX	10		10		10		14		14	
Approx. weight (kg)		95	105	125	145	215	245	295	325	550	610

Hoist with Push-Driven Trolley

Dimensions

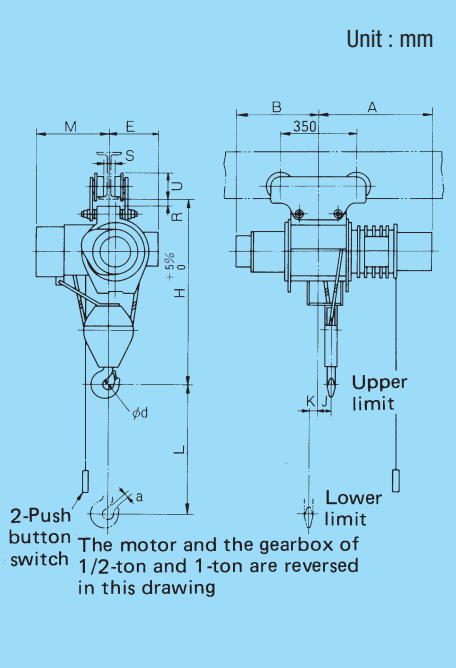

Table of Dimensions

Model		½M-P65	½HM-P65	1M-P65	1HM-P65	2M-P75	2HM-P75	3M-P65	3HM-P65
Hoist type		½M6	½HM6	1M6	1HM6	2M7	2HM7	3M6	3HM6
Trolley type		1P5	1P5	1P5	1P5	3P5	3P5	3P5	3P5
Capacity (t)		½		1		2		3	
Approx. dimensions (mm)	L	6,000	12,000	6,000	12,000	6,000	12,000	6,000	12,000
	H	730		775		985		1,115	
	A	485	655	545	715	595	630	645	690
	B	355	380	350	385	435	615	475	660
	M	335		345		415		460	
	E	190		255		220		245	
	K	20	100	20	90	30	110	35	120
	J	80	105	85	115	75	100	80	110
	φd	40		45		56		71	
	a	21		23		36		42	
Min. curve radius (m)		4.0		4.0		4.0		4.0	
Dimensions with respect to I-beam		U	R	S	U	R	S	U	R	S	U	R	S
150×75×5.5		38 (28)	115	26									
200×100×7		37 (27)	116	51	32 (27)	116	51	40	140	33			
250×125×7.5		34 (24)	118	76	29 (24)	118	76	37	143	58	37	143	58
300×150×11.5					19 (14)	128	101	27	153	83	27	153	83
450×175×11											29	151	108
Approx. weight (kg)		120	130	150	170	265	295	345	375

NOTES : 1. Unless otherwise specified trolley is being assembled so as to meet smudged I-beam size.
2. ( ) dimensions represent dimensions of ½HM6 and 1HM6 (Hoist type)

Dimensions

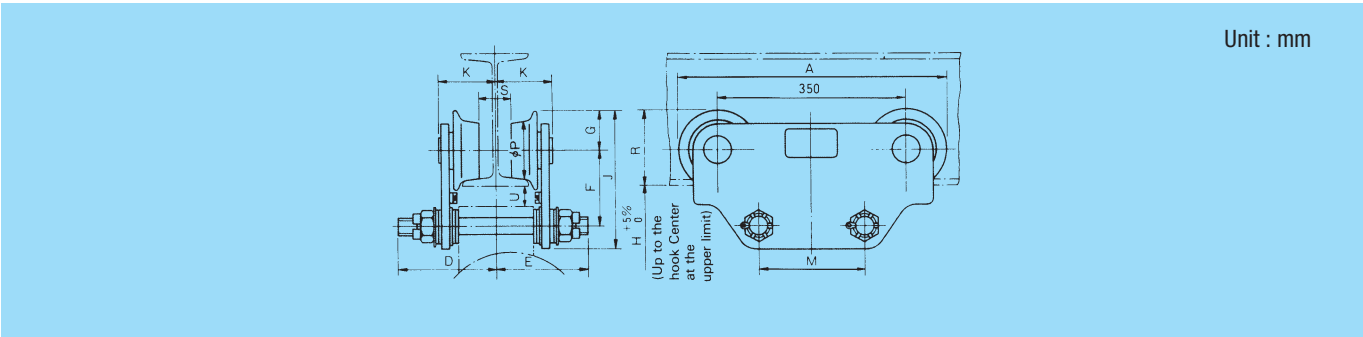

Table of Dimensions

Model		1P5												3P5											
Capacity (t)		½						1						2						3					
Approx. dimensions (mm)	A	476												500											
	F	120												140											
	G	63												75											
	H	730						775						985						1,115					
	J	223												257											
	M	200												200											
	φp	85												110											
Min. curve radius (m)		4.0												4.0											
Dimensions with respect to I-beam		D	E	K	U	R	S	D	E	K	U	R	S	D	E	K	U	R	S	D	E	K	U	R	S
(150×75×5.5)		178	149	79	38 (28)	115	26																		
200×100×7		178	149	92	37 (27)	116	51	178	149	92	32 (27)	116	51	198	198	93	40	140	33						
250×125×7.5		178	149	105	34 (24)	118	76	178	149	105	29 (24)	118	76	198	198	106	37	143	58	198	198	106	37	143	58
300×150×11.5								178	149	118	19 (14)	128	101	198	198	119	27	153	83	198	198	119	27	153	83
450×175×11																				198	198	132	29	151	108
Approx. weight (kg)		25												50											
Applicable hoist type		½(H)M6						1(H)M6						2(H)M7						3(H)M6					

NOTES : 1. Weight indicates empty weight of trolley.
2. This trolley is only for standard headroom type hoist.
3. I-beam (150×75×5.5) is only for ½-ton hoist.
4. ( ) dimensions represent dimensions of ½HM6 and 1HM6 (Hoist type)
5. Unless otherwise specified trolley is being assembled so as to meet smudged I-beam size.

Hoist with Chain-Driven Trolley

Dimensions

Unit : mm

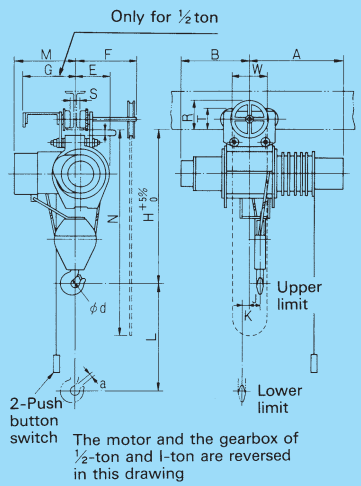

Table of Dimensions

Model		½M-C65		½HM-C65		1M-C65		1HM-C65		2M-C75		2HM-C75		3M-C65		3HM-C65	
Hoist type		½M6		½HM6		1M6		1HM6		2M7		2HM7		3M6		3HM6	
Trolley type		½C5				1C5				3C5				3C5			
Capacity (t)		½				1				2				3			
Approx. dimensions (mm)	L	6,000		12,000		6,000		12,000		6,000		12,000		6,000		12,000	
	H	715				775				985				1,115			
	A	485		655		545		715		595		630		645		690	
	B	355		380		350		385		435		615		475		660	
	M	335				345				415				460			
	E	190				255				220				245			
	W	189/240				189/350				231/350				231/350			
	K	20		100		20		90		30		110		35		120	
	J	80		105		85		115		75		100		80		110	
	ϕd	40				45				56				71			
	a	21				23				36				42			
	N	6,300		12,800		6,300		12,800		6,200		12,700		6,200		12,700	
Min. curve radius (m)		1.3				4.0				4.0				4.0			
Dimensions with respect to I-beam		F	G	S	T	U	R	F	G	S	T	U	R	F	G	S	T	U	R	F	G	S	T	U	R
150×75×5.5		337	247	26	120	28 (18)	133																		
200×100×7		350	260	51	121	27 (17)	134	350	—	51	121	32 (27)	134	366	—	33	150	40	188						
250×125×7.5		363	273	76	124	24 (14)	137	363	—	76	124	29 (24)	137	379	—	58	153	37	200	379	—	58	153	37	200
300×150×11.5								376	—	101	134	19 (14)	147	392	—	83	163	27	210	392	—	83	163	27	210
450×175×11																				405	—	108	161	29	208
Approx. weight (kg)		145		155		165		185		290		320		370		400	

NOTES : 1. ( ) dimensions represent dimensions of ½HM6 and 1HM6 (Hoist type)
2. Unless otherwise specified trolley is being assembled so as to meet smudged I-beam size.

Dimensions

Unit : mm

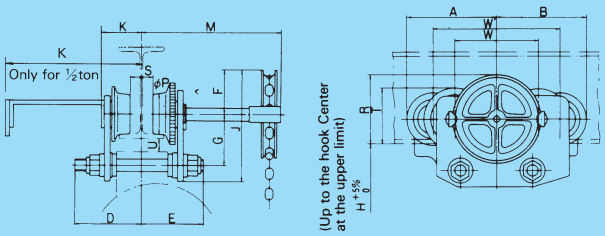

Table of Dimensions

(This table applies to the standard headroom type. For the low headroom type, contact the nearest Hitachi Representative)

Model		1/2C5						1C5						3C5											
Capacity (t)		½						1						2						3					
Approx. dimensions (mm)	A	185						240						250											
	B	230						240						250											
	D	178						178						198											
	E	149						149						198											
	F	85						85						125											
	G	110						120						140											
	J	235						245						305											
	W/W'	189/240						189/350						231/350											
	ϕp	85						85						110											
	H(Standard)	715						775						985						1,115					
Min. curve radius (m)		1.3						4.0						4.0											
Dimensions with respect to I-beam		K	M	R	S	T	U	K	M	R	S	T	U	K	M	R	S	T	U	K	M	R	S	T	U
150×75×5.5		247	337	133	26	120	28 (18)																		
200×100×7		260	350	134	51	121	27 (17)	92	350	134	51	121	32 (27)	93	366	188	33	150	40						
250×125×7.5		273	363	137	76	124	24 (14)	105	363	137	76	124	29 (24)	106	379	200	58	153	37	106	379	200	58	153	37
300×150×11.5								118	376	147	101	134	19 (14)	119	392	210	83	163	27	119	392	210	83	163	27
450×175×11																				132	405	208	108	161	29
Approx. weight (kg)		50						40						74											
Applicable hoist type		½(H)M6						1(H)M6						2(H)M7						3(H)M6					

NOTES : 1. Weight indicates empty weight of the trolley.
2. Dimensions W represent the drive side while W' equals driven side.
3. Unless otherwise specified trolley is being assembled so as to meet smudged I-beam size.
4. ( ) dimensions represent dimensions of 1/2HM6 and 1HM6 (Hoist type)

Low Headroom Type Hoist

Being designed to enable to lift the load block up to the I-beam bottom, this hoist is suitable for handling bulky cargo under low-ceiling building.

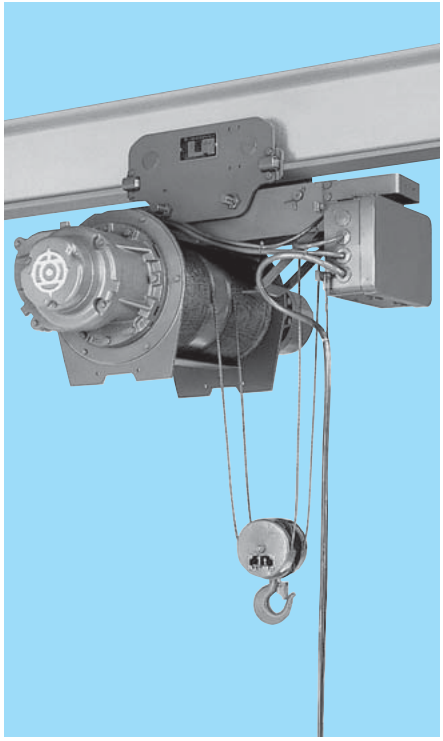

Specifications

Capacity (t)				1/2	1	2	3	5
Hoisting lift (m)				6	6 and 12			6
Hoisting	Speed (m/min)		50Hz	11	11	8.4	7.5	6.7
			60Hz	13	13	10	9	8
	Motor	(kW)	50Hz	1.0	1.9	2.9	4.2	5.9
			60Hz	1.2	2.3	3.5	5	7
		No. of poles		4				
Traversing	Speed (m/min)		50Hz	21				
			60Hz	25				
	Motor	(kW)	50Hz	0.30			0.45	0.63
			60Hz	0.36			0.55	0.75
		No. of poles		4				
Wire rope	No. of falls			4				
	Composition			6×W (19)-B		6×Fi (29)-B		
	Diam. (mm)			ϕ4	ϕ6.3	ϕ8	ϕ10	ϕ12.5
Rating				40% ED 400 Starts/h				
Operating method				Push-button operation ↑↓←→↗↙				
Electric source (3 phase)				200V 50/60Hz,220V 60Hz,380-400V 50Hz,415V 50Hz,440-460V 60Hz				
Control voltage				200V 50/60Hz				

NOTE : 1.The suspension-type hoist and the hoist with chain-driven trolley will be produced on demand.

1/2L-T55

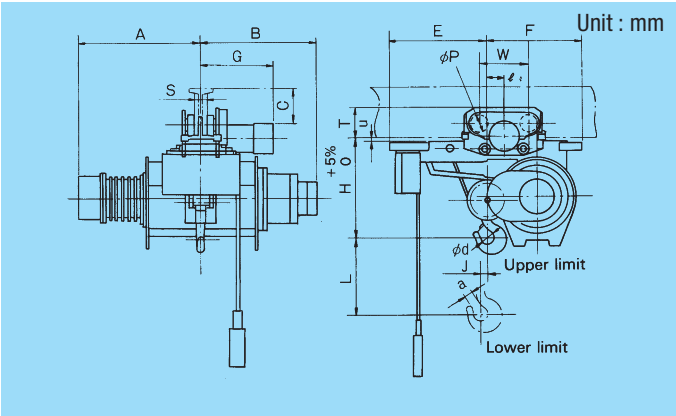

1L-T55

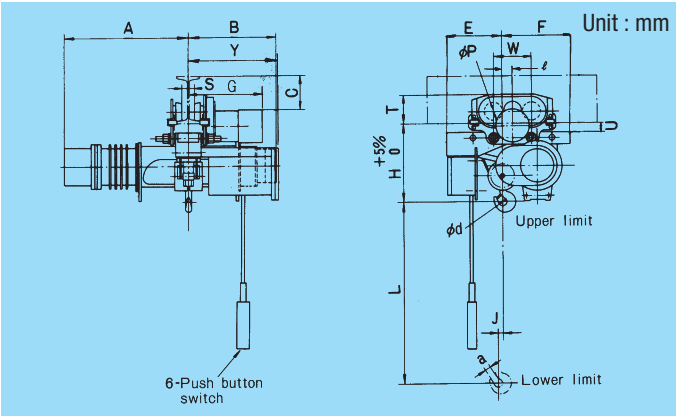

1HL-T55, 2L-T55, 3L-T55

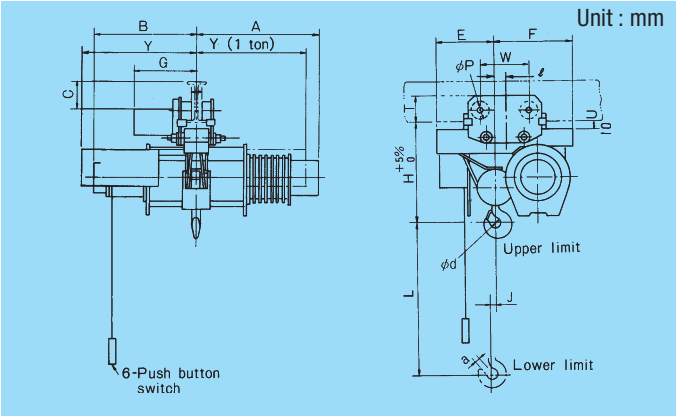

2HL-T55, 3HL-T55, 5L-T55

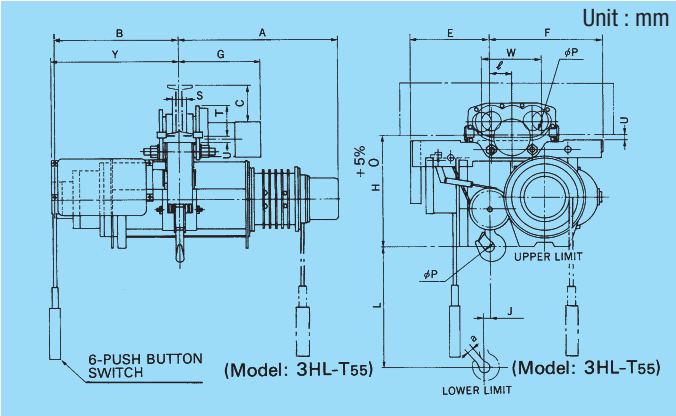

Table of Dimensions

Model		1/2L-T55					1L-T55					1HL-T55					2L-T55					2HL-T55					3L-T55					3HL-T55					5L-T55				
Hoist type		1/2L5					1L5					1HL5					2L5					2HL5					3L5					3HL5					5L5				
Trolley type		1/2T5					1T5					1T5					2T5					2T5					3T5					3HLT5					5T5				
Capacity (t)		1/2					1										2										3										5				
Approx. dimensions (mm)	L	6,000					6,000					12,000					6,000					12,000					6,000					12,000					6,000				
	H	400					425					450					515					520					600					650					810				
	A	550					665					675					705					785					785					830					845				
	B	430					475					560					540					635					600					700					690				
	W	200/290					200/290										200/290										230/310					230/410					250/330				
	E	410					295					325					365					380					400					480					610				
	F	340					360					465					480					565					575					660					680				
	φd	40					45										56										71										90				
	J	26					28					35					42					43					46					50					35				
	Y	—					555					555					630					630					620					620					700				
	φp	96					96										96										128										156/140(DRIVE SIDE/DRIVEN SIDE)				
	a	21					23										36										42										58				
	ℓ	40					54					108					85					104					100					99					89				
Min. curve Radius (m)		1.3(5.0)					1.5										1.8										2.0					3.5					3.0				
Dimensions with respect to I-beam (mm)		S	T	U	C	G	S	T	U	C	G	S	T	U	C	G	S	T	U	C	G	S	T	U	C	G	S	T	U	C	G	S	T	U	C	G	S	T	U	C	G
(150×75×5.5)		17	147	53	85	361																																			
200×100×7		42	148	52	135	374	42	148	52	135	374	42	148	32	135	378																									
250×125×7.5		67	151	49	185	387	67	151	49	185	387	67	151	29	185	391	52	177	28	180	417																			
300×150×11.5							92	160	40	225	400	92	160	20	225	404	77	187	18	220	430	77	225	23	215	450														
450×175×11																	102	185	20	370	443	102	223	25	365	463														
Approx. weight (kg)		155					205					285					310					400					435					605					750				

NOTES : 1. Dimensions W represent dimensions of drive side/driven side.
2. 1/2 ton-When an I-beam (150×75×5.5) is used, the minimum curve radius is 5m.
3. 1/2 ton-When an I-beam (150×75×5.5) is used, 50mm-thick shims are necessary between the building and the I-beam.
4. Unless otherwise specified trolley is being assembled so as to meet smudged I-beam size.

Double-Rail Type Hoist

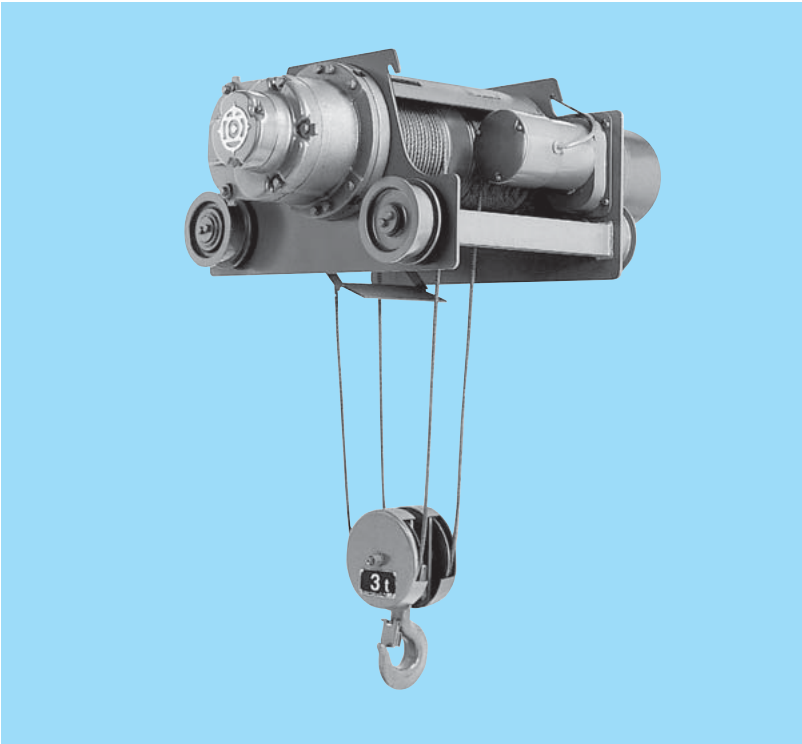

The double-rail hoist is ideally employed as an overhead traveling crane. Since the self-adjusting center core is adopted, the wheels closely follow the rails and are hard to derail during operation. The compact, dustproof structure occupies minimal space and requires less maintenance. Installation cost can be reduced.

Specifications

Capacity (t)				2	3	5	7.5	10	15	20	30
Hoisting lift (m)				12	6 and 12	8 and 12	8 and 12		8 and 12	12	12
Hoisting	Speed (m/min)		50Hz	8.4	7.5	6.7	6.0	5.0	5.0	4.2	2.8
			60Hz	10	9	8	7.2	6.0	6.0	5.0	3.3
	Motor	(kW)	50Hz	2.9	4.2	5.9	7.9	8.8	6.7×2	7.5×2	7.5×2
			60Hz	3.5	5	7	9.5	10.5	8×2	9×2	9×2
		No. of poles		4							
Traversing	Speed (m/min)		50Hz	21			14				
			60Hz	25			17				
	Motor	(kW)	50Hz	0.30	0.45	0.45	0.45×2	0.45×2	0.45×2	0.45×2	0.7×2
			60Hz	0.36	0.55	0.55	0.55×2	0.55×2	0.55×2	0.55×2	0.84×2
		No. of poles		4							
Wire rope	No. of falls			4							8
	Composition			6×Fi (29)-B			6×Fi (29)-B		6×Fi (29)-B	6×Fi (29)IWRC-B	6×Fi (29)-B
	Diam. (mm)			ϕ8	ϕ10	ϕ12.5	ϕ14	ϕ16	ϕ20	ϕ22.4	ϕ20
Rating				40% ED 400 starts/h					40% ED 250 starts/h		
Operating method				Push-button operation ↑ ↓ ← → ↗ ↙		Push-button operation ON OFF ↑ ↓ ← → ↗ ↙					
Electric source (3 phase)				200V 50/60Hz,220V 60Hz,380-400V 50Hz,415V 50Hz,440-460V 60Hz							
Control voltage				200V 50/60Hz							

Double-Rail Type Hoist

Dimensions

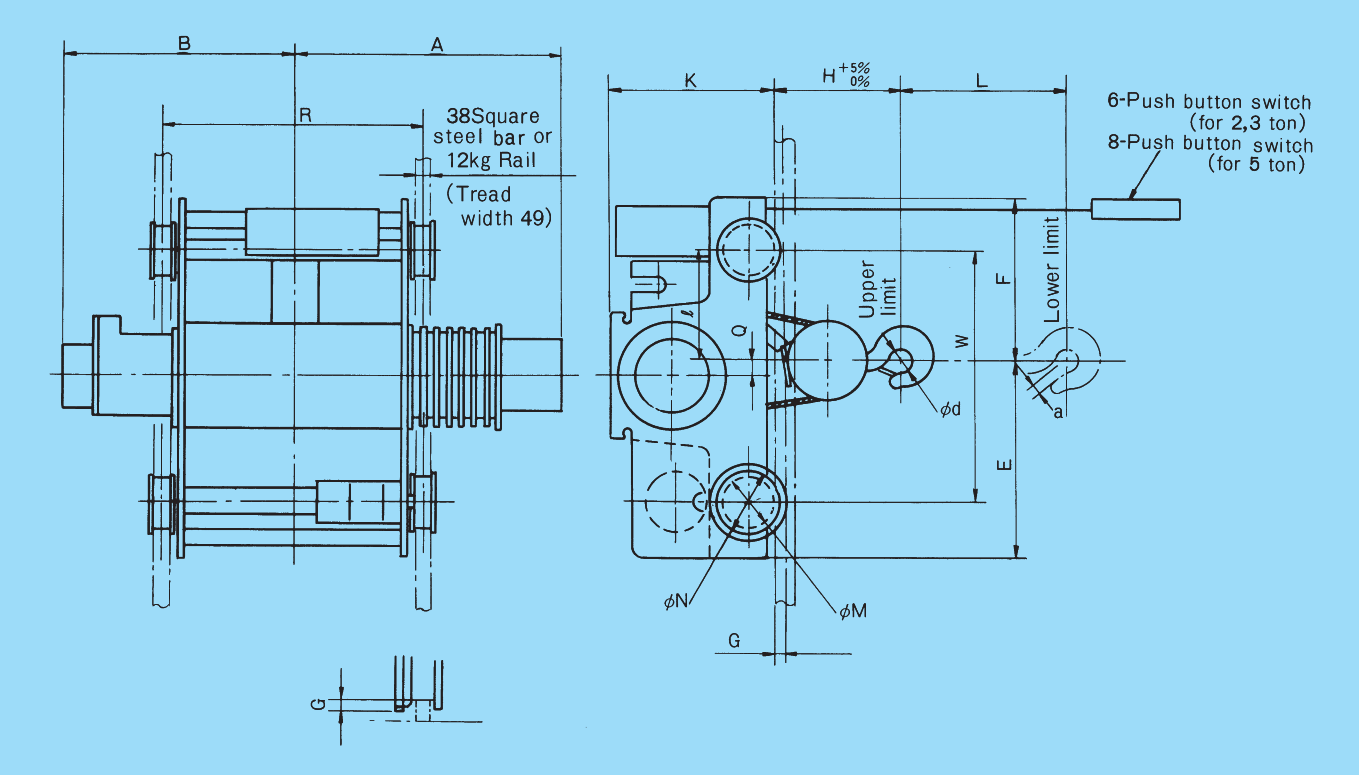

Table of Dimensions

Model		2HD-T55	3D-T55	3HD-T55	5D-T55	5HD-T55
Hoist type		2HD5	3D5	3HD5	5D5	5HD5
Trolley type		2DT5	3DT5	3DT5	5DT5	5DT5
Capacity (t)		2	3		5	
Approx. dimensions (mm)	L	12,000	6,000	12,000	8,000	12,000
	H	310	360		560	
	K	430	480		500	
	R	900	650	950	900	1,150
	F	455	430		530	
	E	425	450		550	
	W	650	650		850	
	A	835	755	915	845	955
	B	675	570	730	690	800
	φd	56	71		90	
	Q	40	51		55	
	φM	160	160		160	
	φN	190	190		190	
	G	26	26		26	
	ℓ	350	325		425	
	a	36	42		58	
Rail (mm)		38 square steel bar or 12 kg rail				
Wheel tread width (mm)		49				
Approx. weight (kg)		380	420	490	680	750

Double-Rail Type Hoist

Dimensions

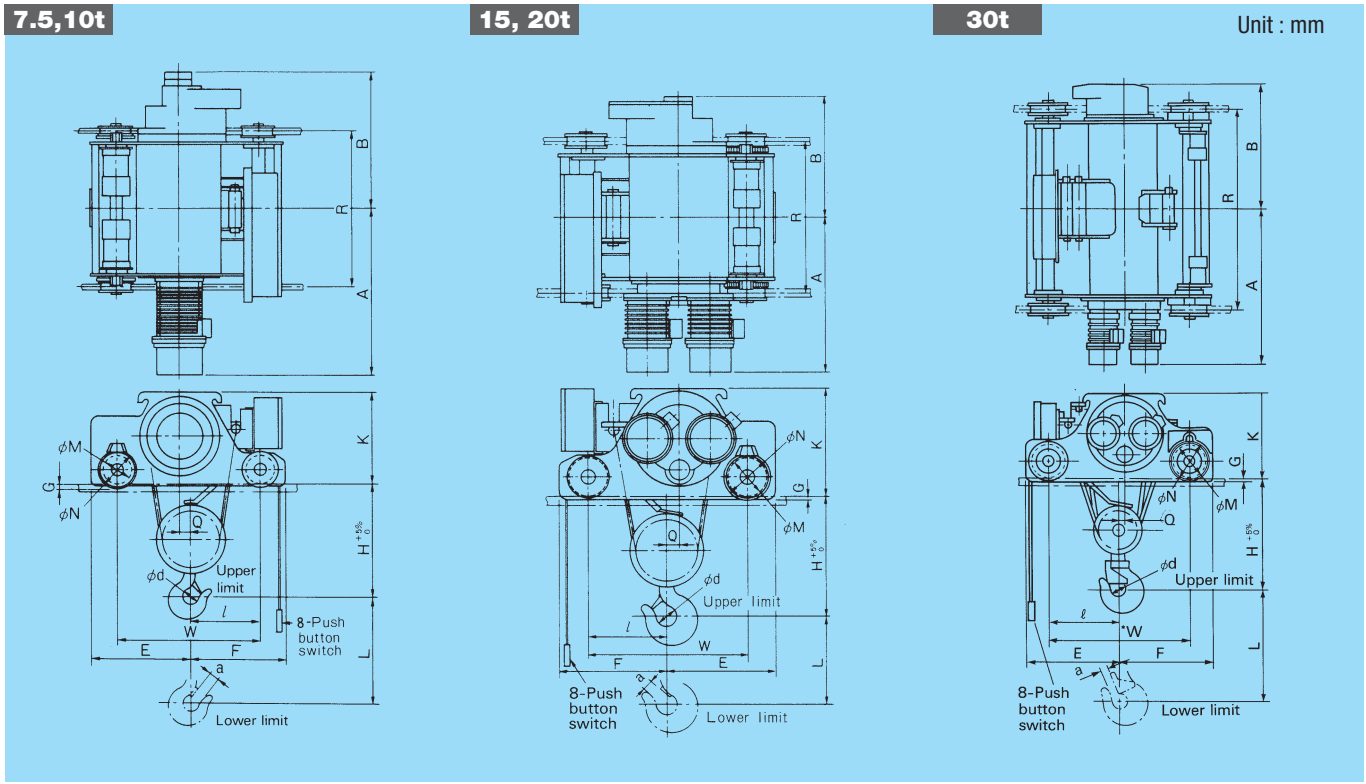

Table of Dimensions

Model		7.5D-T55	7.5HD-T55	10D-T55	10HD-T55	15D-T55	15HD-T55	20HD-T55	30HD-T55
Hoist type		7.5D5	7.5HD5	10D5	10HD5	15D5	15HD5	20HD5	30HD5
Trolley type		7.5DT5	7.5DT5	10DT5	10DT5	15DT5	15DT5	20DT5	30DT5
Capacity (t)		7.5		10		15		20	30
Approx. dimensions (mm)	L	8,000	12,000	8,000	12,000	8,000	12,000	12,000	12,000
	H	515		680		785		930	1,090
	K	600		600		730		730	850
	R	1,000	1,150	1,000	1,150	1,000	1,200	1,300	2,000
	F	605		615		700		700	905
	E	615		650		740		740	935
	W	865		915		1,040		1,040	1,400
	A	1,075	1,150	1,075	1,150	1,060	1,160	1,210	1,550
	B	830	905	885	960	750	850	900	1,250
	φd	100		100		130		165	165
	Q	67		70		89		91	65
	φM	195		195		250		250	350
	φN	225		225		282		282	400
	G	29		29		28		28	38
	a	69		69		86		108	114
	ℓ	433		445		505		505	685
Rail (mm)		44 square steel bar or 15 kg rail				55 square steel bar or 22 kg rail			65 square steel bar or 37 kg rail
Wheel tread width (mm)		53		53		66		66	76
Approx. weight (kg)		1,070	1,130	1,260	1,350	2,150	2,250	2,450	4,400

Stationary Type Hoist

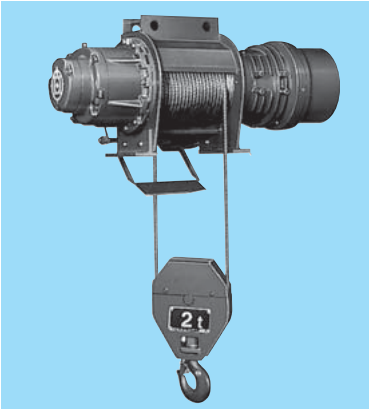

Specifications

Specifications of the V-series standard headroom type hoist applicable, except for traveling.

Dimensions

½,1, 2, 3t

5t

Unit : mm

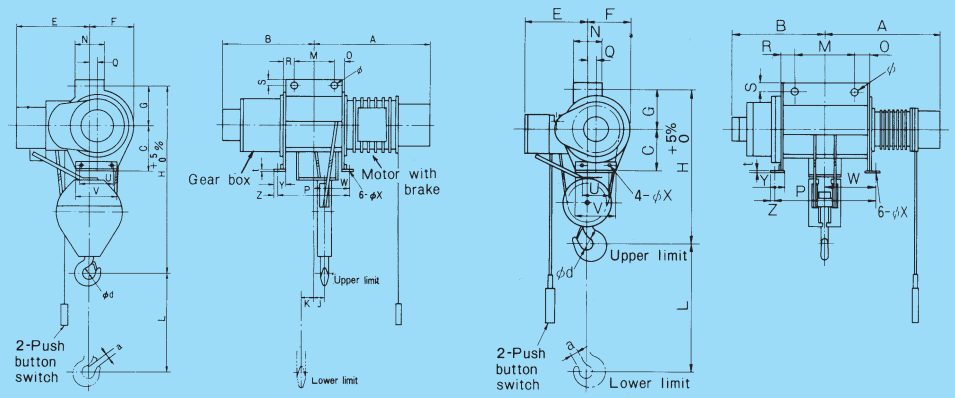

The motors with brake and the gearbox of ½, 1-ton type are reversed in this drawing.

Table of Dimensions

Model		½MW6	½HMW6	1MW6	1HMW6	2MW7	2HMW7	3MW6	3HMW6	5MW5	5HMW5
Capacity (t)		½		1		2		3		5	
Approx. dimensions (mm)	L	6,000	12,000	6,000	12,000	6,000	12,000	6,000	12,000	8,000	12,000
	H	660		710		910		1,050		1,110	
	A	485	655	545	715	595	630	645	690	845	955
	B	355	380	350	385	435	615	475	665	690	800
	M	200		200		200		200		270	
	φ	26		26		36		36		46	
	N	114		139		139		164		189	
	E	335		345		415		460		455	
	F	190		255		220		245		305	
	φd	40		45		56		71		90	
	a	21		23		36		42		58	
	J	80	105	85	115	75	100	80	110	—	—
	K	20	110	20	90	30	110	35	120	—	—
	O	52	80	47	80	56	91	65	106	198	310
	R	52	230	47	217	58	237	79	262	198	310
	Q	25.5		32.5		35.5		41.5		52.5	
	S	30	40	35	40	35		35		50	
	U	180		180		180		260		260	
	V	240		265		265		320		320	
	C	242		242		312		342		315	
	G	150		160		200		225		290	
	P	379	582	372	575	392	606	424	648	745	970
	W	190	218	186	213	195	240	205	246	373	485
	Y	75		70		70		75		75	
	Z	22		22		22		22		22	
	t	12		12		12		12		12	
	φX	18		18		18		18		18	
Approx. weight (kg)		105	115	135	155	255	295	345	385	560	620

Stationary Type Hoist

Dimensions

Unit : mm

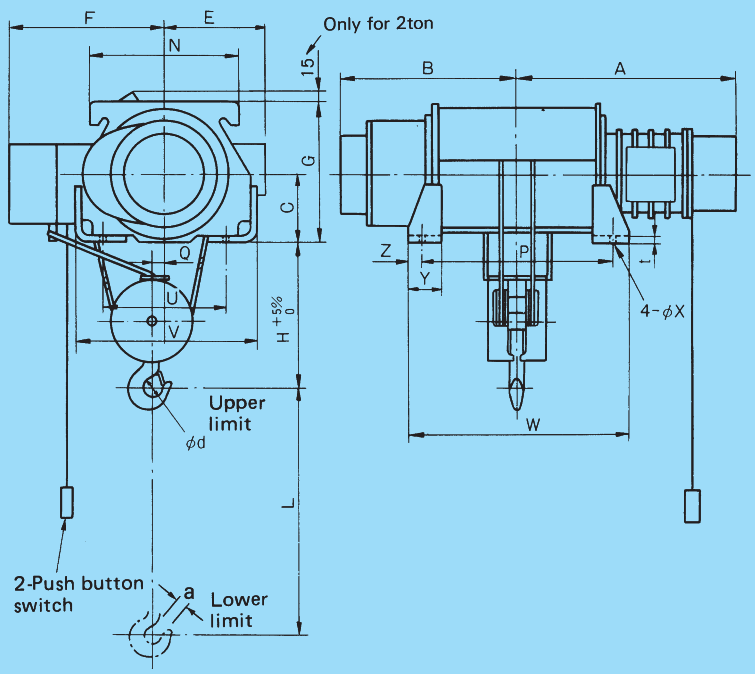

Table of Dimensions

Model		2HDW5	3DW5	3HDW5	5DW5	5HDW5
Capacity (t)		2	3		5	
Approx. dimensions (mm)	L	12,000	6,000	12,000	8,000	12,000
	H	390	445		580	
	A	890	785	950	845	955
	B	730	600	765	690	800
	E	225	238		278	
	F	445	475		540	
	C	171	195		245	
	G	355	395		485	
	N	340	400		420	
	P	980	730	1,030	748	998
	Q	40	51		55	
	U	300	300		380	
	V	450	476		556	
	W	1,040	790	1,125	994	1,218
	φX	26	26		26	
	Y	89	115		190	
	Z	30	30	47.5	123	110
	t	19	19		19	
	φd	56	71		90	
	a	36	42		58	
Approx. weight (kg)		260	340	390	600	665

Stationary Type Hoist

Dimensions

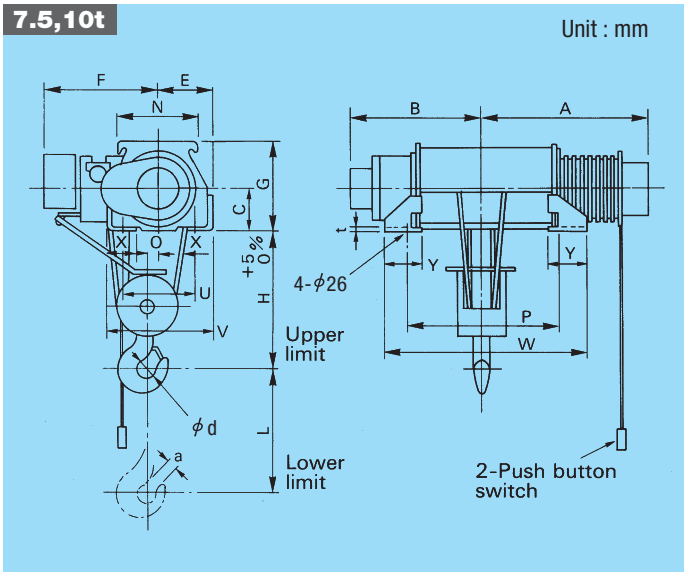

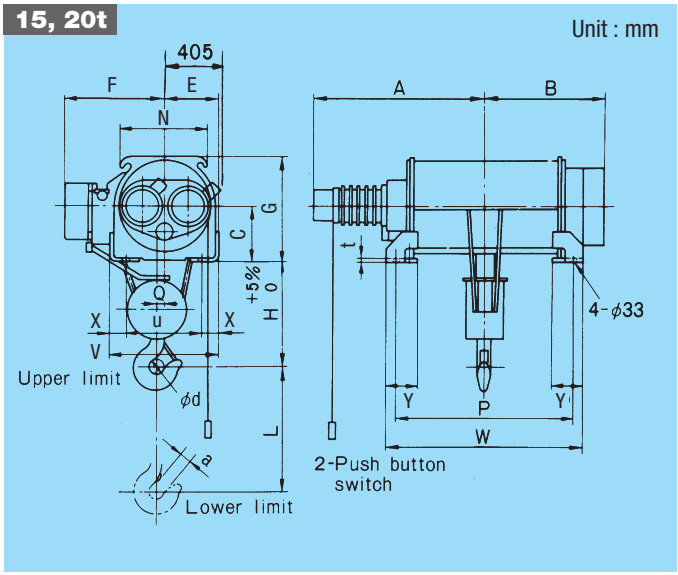

Table of Dimensions

Model		7.5DW5	7.5HDW5	10DW5	10HDW5	15DW5	15HDW5	20HDW5
Capacity (t)		7.5		10		15	15	20
Approx. dimensions (mm)	L	8,000	12,000	8,000	12,000	8,000	12,000	12,000
	H	635		690		840		990
	A	1,075	1,150	1,075	1,150	1,060	1,160	1,210
	B	830	905	885	960	750	850	900
	E	278		309		370		370
	F	660		665		780		785
	C	250		300		340		340
	G	500		600		680		680
	N	460		500		560		560
	P	945	1,095	945	1,095	950	1,150	1,250
	Q	67		70		89		91
	U	380		380		490		490
	V	556		618		740		740
	W	1,315	1,398	1,248	1,398	1,200	1,400	1,494
	X	148		179		200		200
	Y	220	220	207	220	240	240	240
	φd	100				130		165
	t	19		19		22		22
	a	69		69		86		108
Approx. weight (kg)		800	860	1,040	1,080	1,850	2,000	2,150

Hoist with Creep Speed for Hoisting

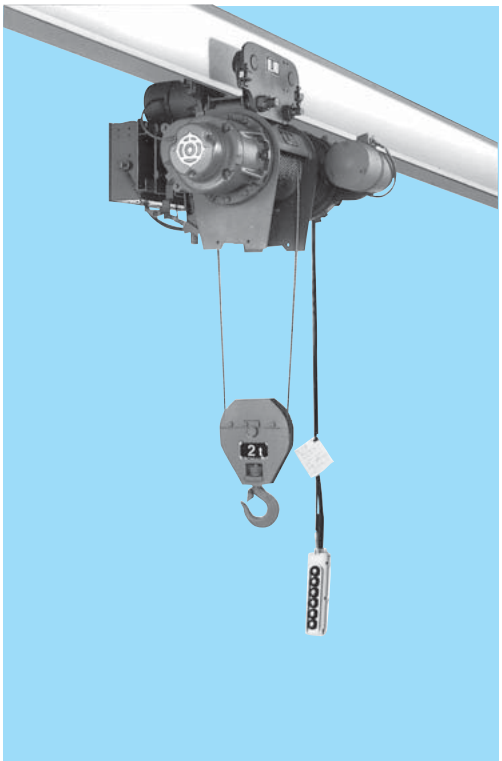

With their fine speed adjustment, Hitachi's hoists meet todey's needs for safer and more accurate transfer work

Today' s increasingly diversified transfer operations in the field are calling for hoists with functions for transferring loads with higher safely and efficiency. Our researchers, with their time-tested expertise in hoist manufacture, have come up with a new family of hoists incorporating fine speed adjustment capability. The novel hoists offer features that promise higher performance, better maintainability and longer life.

Specifications table

type				STANDARD-HEADROOM TYPE HOIST								
Capacity (t)				1/2	1	2	3	5	7.5	10	15	20
Hoisting lift (m)				6, 12				8, 12				12
Hoisting	Speed (m/min)		50Hz	11/1.1	11/1.1	8.4/0.84	7.5/0.75	6.7/0.67	6/0.6	5/0.5	5/0.5	4.2/0.42
			60Hz	13/1.3	13/1.3	10/1	9/0.9	8/0.8	7.2/0.72	6/0.6	6/0.6	5/0.5
	Motor	(kW)	50Hz	1/0.1	1.9/0.19	2.9/0.29	4.2/0.42	5.9/0.59	7.9/1.0	8.8/1.0	6.7/1.1×2	7.5/1.0×2
			60Hz	1.2/0.12	2.3/0.23	3.5/0.35	5/0.5	7/0.7	9.5/1.2	10.5/1.2	8/1.2×2	9/1.2×2
		No.of poles		4/4								
Traversing	Speed (m/min)		50Hz	21					14		14	
			60Hz	25					17		17	
	Motor	(kW)	50Hz	0.30	0.30	0.30	0.45	0.63	0.47×2	0.47×2	0.7×2	0.7×2
			60Hz	0.36	0.36	0.36	0.55	0.75	0.56×2	0.56×2	0.84×2	0.84×2
		No.of poles		4					6		4	
Wire rope	No. of falls			2				4				
	Composition			6×W(19)-B	6×Fi(29)-B							6×Fi(29)IWRC-B
	Diam.(mm)			ϕ6.3	ϕ8	ϕ11.2	ϕ14	ϕ12.5	ϕ14	ϕ16	ϕ20	ϕ22.4

Standard specifications

- Power source
  3-phase 200V 50/60Hz, 220V 60Hz, 380V-400V 50Hz, 415V 50Hz, 440-460 60Hz
- Operating method
  By 6 pushbuttons on the floor : ⇧ ⇩ ← → ↗ and ↙
  (2-step motion on ⇧ and ⇩, 1st step for creep speed and 2nd step for standard speed)
  8 pushbuttons on 5t double rail type and 7.5t or greater
- Rating
  30 minutes (as specified by JIS C9620)
  400 starts/hr (250 starts/hr) 40% ED (40% ED)
  Those in parenthesos are for 15t or grearter.
- Power feed method
  By cable or collector (The cable and collector are not provided.)
- Structure
  Indoor type. Install a shelter with roof to avoid rain falling on the hoist when using it outdoors.
- Ambient temperature
  −10℃ to 40℃
- Humidity
  Up to 90% (No condensation)
- Applicable standard
  JIS C9620 (Electric hoist) and Structural Code for Cranes (Japan)

Type identification

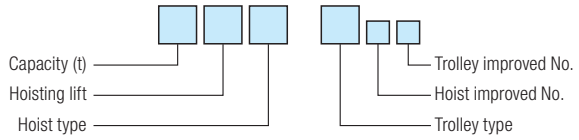

Capacity	Hoisting lift		Hoist type	Trolley type
	Low lift	High lift		
Rated load indicated by tons	No mark	H	V-series Standard headroom type·····MC Low headroom type·····LC Double rail type·····DC	Manual driven trolley·····P Chain driven trolley·····C Motorized trolley·····T

Example

2t high-lift normal type hoist with UP (DOWN) creep speed

2 H MC – T 7 5

NOTE : The machine type is separately maked for the hoist and trolley.
Example : Nameplate of hoist : 2HMC7
Nameplate of trolley : 2T5

	LOW-HEADROOM TYPE HOIST					DOUBLE-RAIL TYPE HOIST							
	1/2	1	2	3	5	2	3	5	7.5	10	15	20	30
	6	6, 12			6	12	6, 12	8, 12				12	
	11/1.1	11/1.1	8.4/0.84	7.5/0.75	6.7/0.67	8.4/0.84	7.5/0.75	6.7/0.67	6/0.6	5/0.5	5/0.5	4.2/0.42	2.8/0.28
	13/1.3	13/1.3	10/1	9/0.9	8/0.8	10/1	9/0.9	8/0.8	7.2/0.72	6/0.6	6/0.6	5/0.5	3.3/0.33
	1/0.1	1.9/0.19	2.9/0.29	4.2/0.42	5.9/0.59	2.9/0.29	4.2/0.42	5.9/0.59	7.9/1	8.8/1	6.7/1×2	7.5/1×2	7.5/1×2
	1.2/0.12	2.3/0.23	3.5/0.35	5/0.5	7/0.7	3.5/0.35	5/0.5	7/0.7	9.5/1.2	10.5/1.2	8/1.2×2	9/1.2×2	9/1.2×2
	4/4					4/4							
	21					21			14				
	25					25			17				
	0.30	0.30	0.30	0.45	0.63	0.30	0.45	0.45	0.45×2	0.45×2	0.45×2	0.45×2	0.70×2
	0.36	0.36	0.36	0.55	0.75	0.36	0.55	0.55	0.55×2	0.55×2	0.55×2	0.55×2	0.84×2
	4					4			4				4
	4					4							8
	6×W(19)-B		6×Fi(29)-B			6×Fi(29)-B			6×Fi(29)-B			6×Fi(29)IWRC-B	6×Fi(29)-B
	ϕ4	ϕ6.3	ϕ8	ϕ10	ϕ12.5	ϕ8	ϕ10	ϕ12.5	ϕ14	ϕ16	ϕ20	ϕ22.4	ϕ20

Ultra High Lift Type Hoist

Standard Type Hoist / Hoist with Motorized Trolley (1 – 5t)

Dimensions

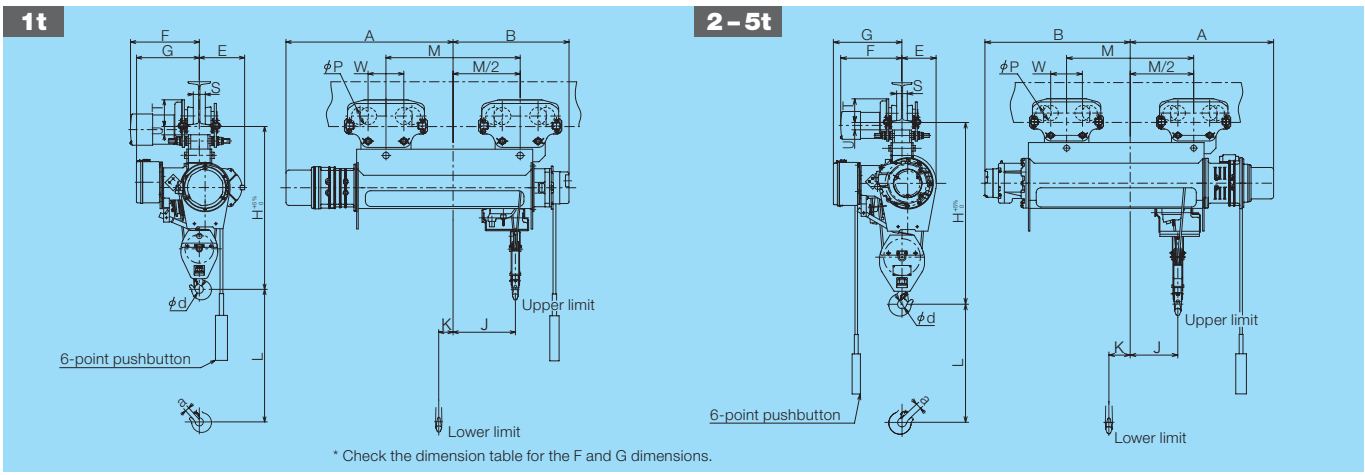

Specifications Table

Model		1MU-T65				2MU-T75				3MU-T65				5MU-T65			
Hoist type		1MU6				2MU7				3MU6				5MU6			
Trolley type		½T5				1T5				2T5				3T5			
Rated load (t)		1				2				3				5			
Lift (m)		24		36		24		36		24		36		24		36	
Hoisting speed (m/min)	50Hz	11				8.4				7.5				6.7			
	60Hz	13				10				9.0				8.0			
Hoisting motor (kW)	50Hz	1.9				2.9				4.2				5.9			
	60Hz	2.3				3.5				5.0				7.0			
Traversing speed (m/min)	50Hz	21															
	60Hz	25															
Traversing motor (kW)	50Hz	0.30×2				0.30×2				0.30×2				0.45×2			
	60Hz	0.36×2				0.36×2				0.36×2				0.55×2			
Electric source (3-phase)		200V 50/60Hz, 220V 60Hz, 380-400V 50Hz,415V 50Hz,440-460V 60Hz															
Rating		40%ED, 400starts/h															
No. of falls - Diameter (mm) and [Composition] of the wire rope		2- ϕ 8 [4×F(40)-B]				2- ϕ 11.2 [4×F(40)-B]				2- ϕ 14 (6×37-A)				2- ϕ 18 (6×37-A)			
Approx. weight (kg)		385		440		475		605		645		760		1,140		1,250	
Approx. dimensions (mm)	L	24,000		36,000		24,000		36,000		24,000		36,000		24,000		36,000	
	H	900/(950)				1,140/(1,190)				1,250/(1,330)				1,490/(1,600)			
	A	935		1,125		905		1,115		950		1,180		1,080		1,310	
	B	650		875		915		1,045		920		1,150		935		1,175	
	E	255				220				245				325			
	G	355				425				470				550			
	J	348		573		300		490		346		576		400		633	
	K	80		52		134		153		120		122		70		77	
	M	750		1,200		800		1,220		800		1,260		940		1,385	
	W	200/290				200/290				200/290				230/310			
	ϕ d	45				56				71				90			
	a	23				36				42				58			
	ϕ p	96				96				96				128			
Clearance to I-beam (mm)		F	S	T	U	F	S	T	U	F	S	T	U	F	S	T	U
200×100×7		374	42	148	47	—	—	—	—	—	—	—	—	—	—	—	—
250×125×7.5		387	67	151	44	387	67	151	44	393	67	153	39	—	—	—	—
300×150×11.5		—	—	—	—	400	92	160	35	406	92	163	29	430	77	187	28
450×175×11		—	—	—	—	—	—	—	—	—	—	—	—	443	102	185	30
Min. curve radius (m)		Straight line (1.5)				Straight line (1.8)				Straight line (2.0)				Straight line (3.0)			

NOTES : 1. The number in parentheses of dimension H stands for the I-beam bending curve.
2. The number in parentheses of the Min. curve radius indicates the minimum radius of the I-beam bending curve.
3. The ultra high lift type for straight lines cannot be used for curved lines.
4. The numbers in dimension W indicate the values for the driving side/driven side.
5. Unless otherwise specified, the product is delivered in the I-beam dimension of .
6. If the rail contains curves, please notify us.

Ultra High Lift Type Hoist

Hoist with Motorized Trolley (7.5–20t)

Dimensions

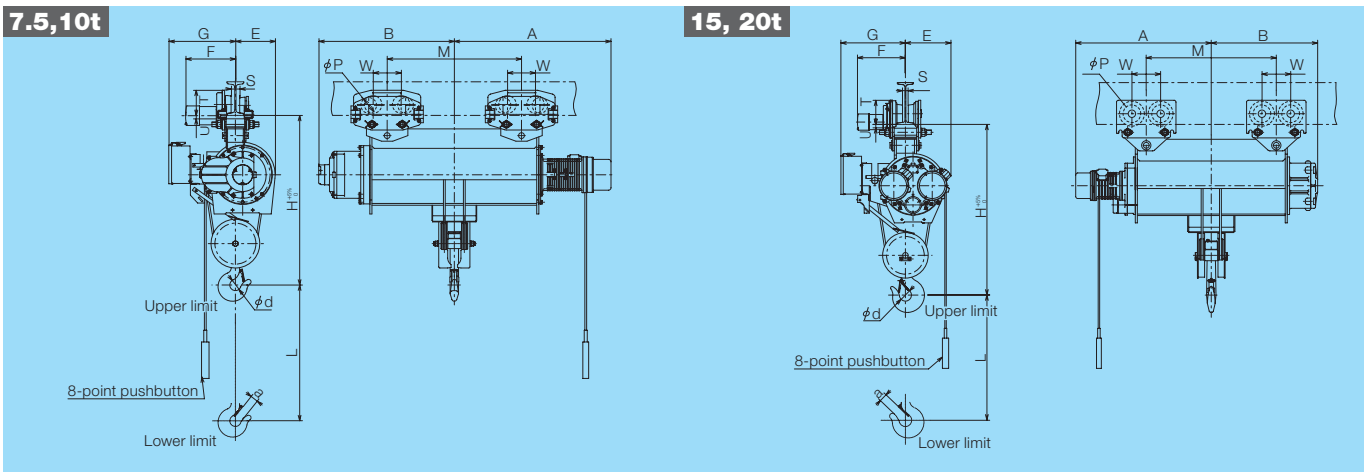

Specifications Table

Model		7.5MU-T55				10MU-T55				15MU-T56				20MU-T56			
Hoist type		7.5MU5				10MU5				15MU5				20MU5			
Trolley type		4FT5				5FT5				10AT6				10AT6			
Rated load (t)		7.5				10				15				20			
Lift (m)		20		30		20		30		20		30		20		30	
Hoisting speed (m/min)	50Hz	6.0				5.0				5.0				4.2			
	60Hz	7.2				6.0				6.0				5.0			
Hoisting motor (kW)	50Hz	7.9				8.8				6.7×2				7.5×2			
	60Hz	9.5				10.5				8.0×2				9.0×2			
Traversing speed (m/min)	50Hz	14															
	60Hz	17															
Traversing motor (kW)	50Hz	0.47×2				0.47×2				0.7×2				0.7×2			
	60Hz	0.56×2				0.56×2				0.84×2				0.84×2			
Electric source (3-phase)		200V 50/60Hz, 220V 60Hz, 380-400V 50Hz,415V 50Hz,440-460V 60Hz															
Rating		40%ED, 400starts/h								40%ED, 250starts/h							
No. of falls - Diameter (mm) and [Composition] of the wire rope		4-ϕ14 [6×Fi(29)-B]				4-ϕ16 [6×Fi(29)-B]				4-ϕ20 [6×Fi(29)-B]				4-ϕ22.4 [6×Fi(29)-B]IWRC			
Approx. weight (kg)		1,450		1,650		1,870		2,470		3,700		4,200		3,900		4,600	
Approx. dimensions (mm)	L	20,000		30,000		20,000		30,000		20,000		30,000		20,000		30,000	
	H	1,345		1,345		1,515		1,515		1,865		1,865		2,010		2,010	
	A	1,400		1,650		1,410		1,660		1,455		1,760		1,550		1,890	
	B	1,160		1,410		1,220		1,470		1,140		1,450		1,250		1,590	
	E	320		320		360		360		500		500		500		500	
	G	600		600		600		600		705		705		705		705	
	M	1,200		1,700		1,200		1,700		1,400		2,000		1,530		2,180	
	W	230/310		230/310		250/330		250/330		309/309		309/309		309/309		309/309	
	ϕd	100		100		100		100		130		130		165		165	
	a	69		69		69		69		86		86		108		108	
	ϕp	128		128		156/140		156/140		190		190		190		190	
Clearance to I-beam (mm)		F	S	T	U	F	S	T	U	F	S	T	U	F	S	T	U
450×175×11		453	102	184	30	460	102	225	30	524	62	280	30	524	62	280	30
600×190×13		461	117	189	25	468	117	230	25	532	77	285	25	532	77	285	25
Min. curve radius (m)		Straight line				Straight line				Straight line				Straight line			

NOTES : 1. The numbers in dimension W indicate the values for the driving side/driven side.
2. Please contact us when the rail contains curves.
3. Unless otherwise specified, the product is delivered in the I-beam dimension of .

Ultra High Lift Type Hoist

Double Rail Type Hoist (2–5t)

Dimensions

2– 5t

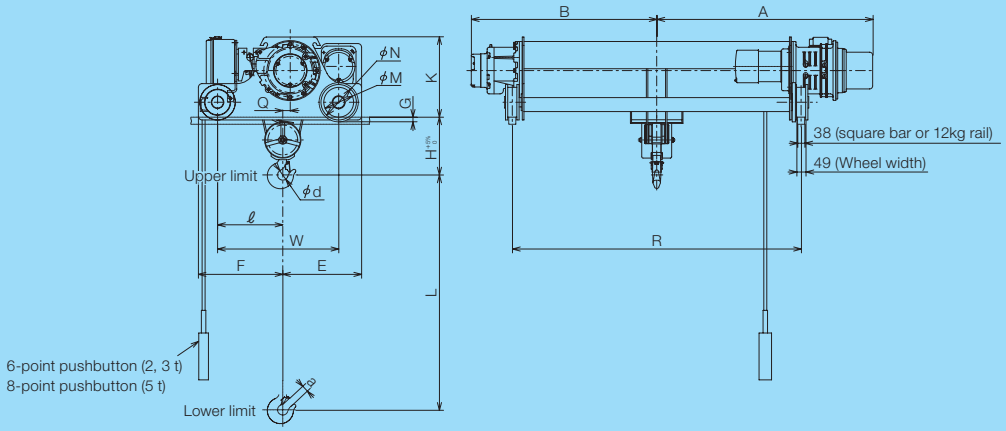

Specifications Table

Model		2DU-T55	3DU-T55	5DU-T55
Hoist type		2DU5	3DU5	5DU5
Trolley type		2DT5	3DT5	5DT5
Rated load (t)		2	3	5
Lift (m)		20	20	20
Hoisting speed (m/min)	50Hz	8.4	7.5	6.7
	60Hz	10	9.0	8.0
Hoisting motor (kW)	50Hz	2.9	4.2	5.9
	60Hz	3.5	5.0	7.0
Traversing speed (m/min)	50Hz	21		
	60Hz	25		
Traversing motor (kW)	50Hz	0.30	0.45	0.45
	60Hz	0.36	0.55	0.55
Electric source (3-phase)		200V 50/60Hz, 220V 60Hz, 380-400V 50Hz,415V 50Hz,440-460V 60Hz		
Rating		40% ED, 400 starts/h		
No. of falls - Diameter (mm) and [Composition] of the wire rope		4-φ8 [6×Fi(29)-B]	4-φ10 [6×Fi(29)-B]	4-φ12.5 [6×Fi(29)-B]
Approx. weight (kg)		560	700	1,100
Approx. dimensions (mm)	L	20,000	20,000	20,000
	H	310	360	560
	K	430	480	500
	R	1,550	1,550	1,850
	F	455	430	530
	E	425	450	550
	W	650	650	850
	A	1,170	1,215	1,320
	B	1,010	1,030	1,165
	φd	56	71	90
	Q	40	51	55
	φM	160	160	160
	φN	190	190	190
	G	26	26	26
	ℓ	350	325	425
	a	36	42	58
Square rail (mm)		38 square bar or 12kg rail		
Wheel width (mm)		49	49	49

Ultra High Lift Type Hoist

Double Rail Type Hoist (7.5–20t)

Dimensions

7.5, 10t

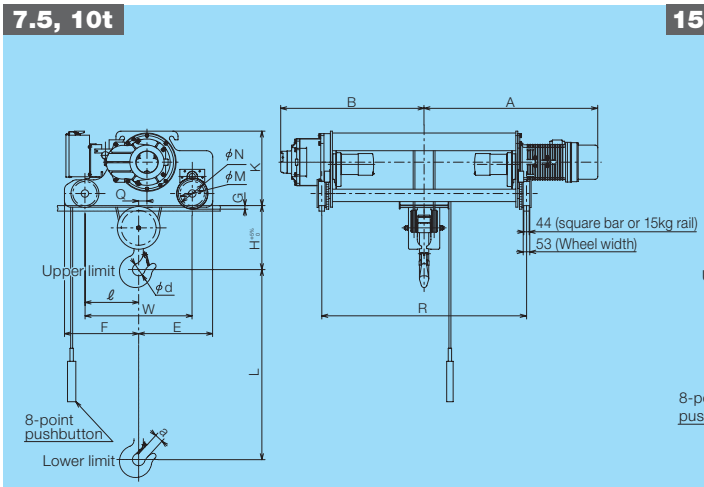

15, 20t

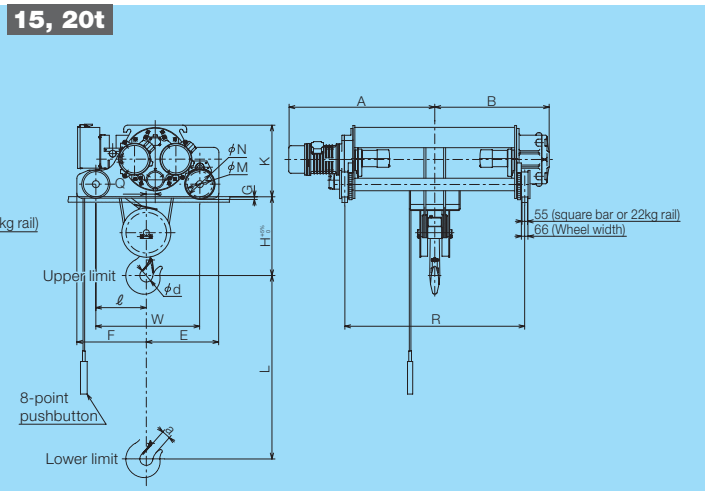

Specifications Table

Model		7.5DU-T55		10DU-T55		15DU-T55		20DU-T55	
Hoist type		7.5DU5		10DU5		15DU5		20DU5	
Trolley type		7.5DT5		10DT5		20DT5		20DT5	
Rated load (t)		7.5	7.5	10	10	15	15	20	20
Lift (m)		20	30	20	30	20	30	20	30
Hoisting speed (m/min)	50Hz	6.0	6.0	5.0	5.0	5.0	5.0	4.2	4.2
	60Hz	7.2	7.2	6.0	6.0	6.0	6.0	5.0	5.0
Hoisting motor (kW)	50Hz	7.9	7.9	8.8	8.8	6.7×2	6.7×2	7.5×2	7.5×2
	60Hz	9.5	9.5	10.5	10.5	8.0×2	8.0×2	9.0×2	9.0×2
Traversing speed (m/min)	50Hz	14							
	60Hz	17							
Traversing motor (kW)	50Hz	0.45×2	0.45×2	0.45×2	0.45×2	0.45×2	0.45×2	0.45×2	0.45×2
	60Hz	0.55×2	0.55×2	0.55×2	0.55×2	0.55×2	0.55×2	0.55×2	0.55×2
Electric source (3-phase)		200V 50/60Hz, 220V 60Hz, 380-400V 50Hz,415V 50Hz,440-460V 60Hz							
Rating		40% ED, 400 starts/h				40% ED, 250 starts/h			
No. of falls - Diameter (mm) and [Composition] of the wire rope		4-φ14 [6×Fi(29)-B]		4-φ16 [6×Fi(19)-B]		4-φ20 [6×Fi(29)-B]		4-φ22.4 [6×Fi(29)IWRC-B]	
Approx. weight (kg)		1,500	1,650	1,700	1,810	2,940	3,200	3,000	3,800
Approx. dimensions (mm)	L	20,000	30,000	20,000	30,000	20,000	30,000	20,000	30,000
	H	515	515	680	680	785	785	930	930
	K	600	600	600	600	730	730	730	730
	R	1,650	2,150	1,650	2,150	1,800	2,400	1,950	2,600
	F	605	605	615	615	700	700	700	700
	E	615	615	650	650	740	740	740	740
	W	865	865	915	915	1,040	1,040	1,040	1,040
	A	1,400	1,650	1,405	1,660	1,460	1,760	1,550	1,890
	B	1,155	1,400	1,210	1,470	1,150	1,450	1,250	1,590
	φd	100	100	100	100	130	130	165	165
	Q	67	67	70	70	89	89	91	91
	φM	195	195	195	195	250	250	250	250
	φN	225	225	225	225	282	282	282	282
	G	29	29	29	29	28	28	28	28
	ℓ	433	433	445	445	505	505	505	505
	a	69	69	69	69	86	86	108	108
Square rail (mm)		44 square bar or 15kg rail				55 square bar or 22kg rail			
Wheel width (mm)		53	53	53	53	66	66	66	66

Pair Hoist

(7.5, 10t)

Dimensions

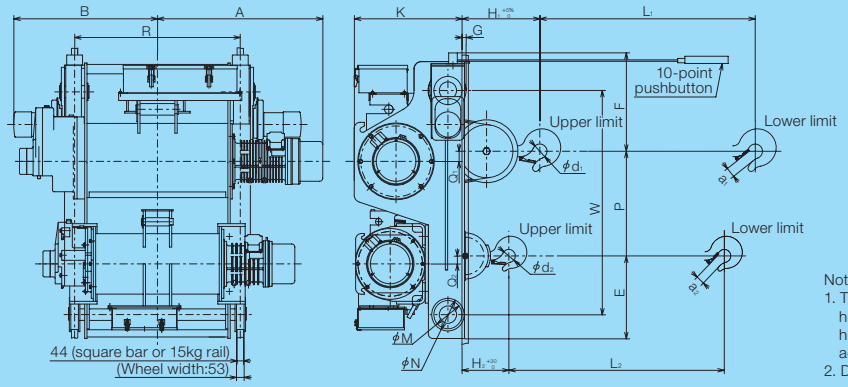

Notes
1. The lower limit position of the hook for the main hoisting rope differs from that for the auxiliary hoisting rope. Please be sure to take this into account when designing the crane system.
2. Double lifting is not allowed.

Specifications Table

Model				7.5D/2HD-T555	7.5HD/2HD-T555	7.5D/3HD-T555	7.5HD/3HD-T555	10D/2HD-T555	10HD/2HD-T555	10D/3HD-T555	10HD/3HD-T555	10D/5D-T555	10HD/5HD-T555
Hoist type				7.5D5	7.5HD5	7.5D5	7.5HD5	10D5	10HD5	10D5	10HD5	10D5	10HD5
Hoist type				2HDWZ5	2HDWZ5	3HDWZ5	3HDWZ5	2HDWZ5	2HDWZ5	3HDWZ5	3HDWZ5	5DWZ5	5HDWZ5
Trolley type				7.5/2DT5		7.5/3DT5		10/2DT5		10/3DT5		10/5DT5	
Main rope	Rated load (t)			7.5				10					
	Lift (m)			8	12	8	12	8	12	8	12	8	12
	Speed (m/min)		50Hz	6.0				5.0					
			60Hz	7.2				6.0					
	Motor	(kW)	50Hz	7.9				8.8					
			60Hz	9.5				10.5					
		No. of poles		4				4					
	No. of falls - Diameter (mm) [Composition]			4- ϕ 14 [6×Fi(29)-B]				4- ϕ 14 [6×Fi(29)-B]					
Auxiliary rope	Rated load (t)			2		3		2		3		5	
	Lift (m)			8	12	8	12	8	12	8	12	8	12
	Speed (m/min)		50Hz	8.4		7.5		8.4		7.5		6.7	
			60Hz	10		9.0		10		9.0		8.0	
	Motor	(kW)	50Hz	2.9		4.2		2.9		4.2		5.9	
			60Hz	3.5		5.0		3.5		5.0		7.0	
		No. of poles		4		4		4		4		4	
	No. of falls - Diameter (mm) [Composition]			4- ϕ 8 [6×Fi(29)-B]		4- ϕ 10 [6×Fi(29)-B]		4- ϕ 8 [6×Fi(29)-B]		4- ϕ 10 [6×Fi(29)-B]		4- ϕ 12.5[6×Fi(29)-B]	
Traversing	Speed (m/min)		50Hz	14				14					
			60Hz	17				17					
	Motor	(kW)	50Hz	0.45×2				0.45×2					
			60Hz	0.55×2				0.55×2					
		No. of poles		4				4					
	Rating			40% ED, 400 starts/h									
Electric source (3-phase)				200V 50/60Hz, 220V 60Hz, 380-400V 50Hz,415V 50Hz,440-460V 60Hz									
Operation method				Above-floor 10-point pushbutton (ON, OFF, Main UP, Main DN, Aux. UP, Aux. DN, East, West, South, North)									
Approx. weight (kg)				1,600	1,660	1,690	1,750	1,710	1,800	1,800	2,100	1,830	2,160
Approx. dimensions (mm)	L_1			8,000	12,000	8,000	12,000	8,000	12,000	8,000	12,000	8,000	12,000
	L_2			8,000	12,000	8,000	12,000	8,000	12,000	8,000	12,000	8,000	12,000
	H_1			415				540					
	H_2			145		195		135		195		325	
	K			750				750					
	R			1,000	1,150	1,000	1,150	1,000	1,150	1,000	1,150	1,000	1,150
	F			675	675	675	675	675	675	675	675	675	675
	E			635	635	645	645	635	635	645	645	630	630
	P			710				720		710		725	
	W			1,550				1,550					
	A			1,075	1,150	1,075	1,150	1,075	1,150	1,075	1,150	1,075	1,150
	B			935	1,010	935	1,010	935	1,010	935	1,010	935	1,010
	ϕd_1			100				100					
	a_1			69				69					
	ϕd_2			56		71		56		71		90	
	a_2			36		42		36		42		58	
	Q_1			67				70					
	Q_2			40		51		40		51		55	
	ϕM			195				195					
	ϕN			225				225					
	G			29				29					
Square rail				44 square bar or 15kg rail				44 square bar or 15kg rail					
Wheel width (mm)				53				53					

Pair Hoist

(15 t, 20t)

Dimensions

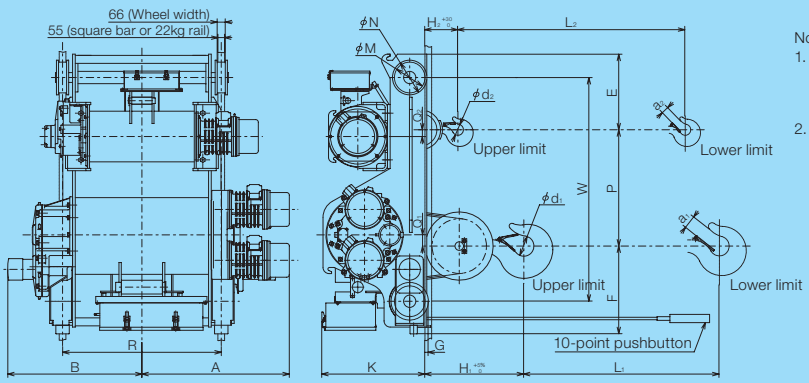

Notes
1. The lower limit position of the hook for the main hoisting rope differs from that for the auxiliary hoisting rope. Please be sure to take this into account when designing the crane system.
2. Double lifting is not allowed.

Specifications Table

Model				15D/2HD-T555	15HD/2HD-T555	15D/3HD-T555	15HD/3HD-T555	15D/5D-T555	15D/5HD-T555	20HD/2HD-T555	20HD/3HD-T555	20HD/5HD-T555
Hoist type				15D5	15HD5	15D5	15HD5	15D5	15HD5	20HD5	20HD5	20HD5
Hoist type				2HDW5	2HDW5	3HDW5	3HDW5	5DW5	5HDW5	2HDW5	3HDW5	5HDW5
Trolley type				15/2DT5	15/2DT5	15/3DT5	15/3DT5	15/5DT5	15/5DT5	20/2DT5	20/3DT5	20/50T5
Main rope	Rated load (t)			15						20		
	Lift (m)			8	12	8	12	8	12	12		
	Speed (m/min)		50Hz	5.0						4.2		
			60Hz	6.7						5.0		
	Motor	(kW)	50Hz	6.7×2						7.5×2		
			60Hz	8.0×2						9.0×2		
		No. of poles		4						4		
	No. of falls - Diameter (mm) [Composition]			4- ϕ 20 [6×Fi(29)-B]						4- ϕ 22.4 [6×Fi(29)-IWRC-B]		
Auxiliary rope	Rated load (t)			2		3		5		2	3	5
	Lift (m)			8	12	8	12	8	12	12		
	Speed (m/min)		50Hz	8.4		7.5		6.7		8.4	7.5	6.7
			60Hz	10		9.0		8.0		10	9.0	8.0
	Motor	(kW)	50Hz	2.9		4.2		5.9		2.9	4.2	5.9
			60Hz	3.5		5.0		7.0		3.5	5.0	7.0
		No. of poles		4		4		4		4	4	4
	No. of falls - Diameter (mm) [Composition]			4- ϕ 8 [6×Fi(29)-B]		4- ϕ 10 [6×Fi(29)-B]		4- ϕ 12.5 [6×Fi(29)-B]		4-ϕ8 [6×Fi(29)-B]	4-ϕ10 [6×Fi(29)-B]	4-ϕ12.5 [6×Fi(29)-B]
Traversing	Speed (m/min)		50Hz	14						14		
			60Hz	17						17		
	Motor	(kW)	50Hz	0.45×2						0.45×2		
			60Hz	0.55×2						0.55×2		
		No. of poles		4						4		
	Rating			40% ED, 250 starts/h								
Electric source (3-phase)				200V 50/60Hz, 220V 60Hz, 380-400V 50Hz,415V 50Hz,440-460V 60Hz								
Operation method				Above-floor 10-point pushbutton (ON, OFF, Main UP, Main DN, Aux. UP, Aux. DN, East, West, South, North)								
Approx. weight (kg)				2,730	2,810	2,830	2,930	3,010	3,170	3,140	3,260	3,500
Approx. dimensions (mm)			L_1	8,000	12,000	8,000	12,000	8,000	12,000	12,000		
			L_2	8,000	12,000	8,000	12,000	8,000	12,000	12,000		
			H_1	665						810		
			H_2	80		140		270		75	140	270
			K	850						850		
			R	1,000	1,200	1,000	1,200	1,000	1,200	1,300		
			F	720		720		720		720		
			E	655		680		675		620	680	675
			P	965		940		945		940	940	945
			W	1,820						1,820		
			A	1,060	1,160	1,060	1,160	1,060	1,160	1,210		
			B	950	1,050	950	1,050	950	1,050	1,100		
			ϕd_1	130						165		
			a_1	86						108		
			ϕd_2	56		71		90		56	71	90
			a_2	36		42		58		36	42	58
			Q_1	89		89		89		91		
			Q_2	40		51		55		40	51	55
			ϕ M	250						250		
			ϕ N	282						282		
			G	28						28		
Square rail				55 square bar or 22kg rail						55 square bar or 22kg rail		
Wheel width (mm)				66						66		

NOTE : 1. Models of 30t,40t and 50t will be produced on demand.

Special Hoisting Speed Type Hoist

Specifications Table

50Hz

(Unit: m/min)

Rated load (t)	Standard speed	Low-speed hoisting		High-speed hoisting		* Dual-speed hoisting					
		Half (1/2 speed)	Creep (1/4 speed)	Fast (×1.5 speed)	Fast (×2 speed)	Standard / 1/10 speed (10 : 1)	Standard / 1/2 speed (2 : 1)	Half / 1/10 speed (5 : 1)	Half / 1/20 speed (10 : 1)	Standard ×1.5 / 0.75 speed (2 : 1)	Standard ×2 / standard speed (2 : 1)
1/2	11	5.5	—	—	—	11/1.1	11/5.5	5.5/1.1	5.5/0.55	—	—
1	11	5.5	2.8	16.8	22	11/1.1	11/5.5	5.5/1.1	5.5/0.55	16.8/8.4	22/11
2	8.4	4.2	2.1	11	15	8.4/0.84	8.4/4.2	4.2/0.84	4.2/0.42	11/5.5	15/7.5
3	7.5	3.7	1.9	11	15	7.5/0.75	7.5/3.7	3.7/0.75	3.7/0.37	11/5.5	15/7.5
5	6.7	3.4	1.7	—	10	6.7/0.67	6.7/3.4	3.4/0.67	3.4/0.34	—	10/5.0
7.5	6.0	3.0	1.5	—	10	6.0/0.6	6.0/3.0	3.0/0.60	3.0/0.30	—	—
10	5.0	2.5	1.2	7.3	—	5.0/0.5	5.0/2.5	2.5/0.50	2.5/0.25	—	—
15	5.0	2.5	1.2	—	—	5.0/0.5	5.0/2.5	2.5/0.50	2.5/0.25	—	—
20	4.2	2.1	1.0	—	—	4.2/0.42	4.2/2.1	2.1/0.42	2.1/0.21	—	—
30	2.8	1.4	—	—	—	2.8/0.28	2.8/1.4	1.4/0.28	1.4/0.14	—	—

NOTE : 1: * Indicates two-step operation.

Special Traverse Speed Type Hoist

Specifications Table

50Hz

(Unit: m/min)

Rated load (t)	Standard speed	Low-speed traversing		High-speed traversing	* Dual-speed traversing		
		Slow	Creep (1/4 speed)		Standard / 1/4 speed (4 : 1)	Standard / half speed (2 : 1)	Standard ×2 / standard speed (2 : 1)
1/2	21	10.5	5.0	—	21/5.0	21/10.5	42/21
1	21	10.5	5.0	—	21/5.0	21/10.5	42/21
2	21	10.5	5.0	—	21/5.0	21/10.5	42/21
3	21	10.5	5.0	—	21/5.0	21/10.5	42/21
5	21	10.5	5.0	—	21/5.0	21/10.5	42/21
*7.5	14	10.5 7.0	3.5	21	14/3.5	21/10.5 14/7	—
*10	14	10.5 7.0	3.5	21	14/3.5	21/10.5 14/7	—
15	14	7.0	3.5	—	14/3.5	14/7.0	—
20	14	7.0	3.5	—	14/3.5	14/7.0	—
*30	14	7.0	3.5	—	14/3.5	14/7.0	—

NOTE : 1: * 7.5, 10 (tons): The upper stage is of the standard type, and the lower stage is of the double rail type.
2: * 30 (tons): Available only for the double rail type.

Specifications Table

60Hz

(Unit: m/min)

Rated load (t)	Standard speed	Low-speed hoisting		High-speed hoisting		* Dual-speed hoisting					
		Half (1/2 speed)	Creep (1/4 speed)	Fast (×1.5 speed)	Fast (×2 speed)	Standard / 1/10 speed (10 : 1)	Standard / 1/2 speed (2 : 1)	Half / 1/10 speed (5 : 1)	Half / 1/20 speed (10 : 1)	Standard ×1.5 / 0.75 speed (2 : 1)	Standard ×2 / standard speed (2 : 1)
1/2	13	6.5	—	—	—	13/1.3	13/6.5	6.5/1.3	6.5/0.65	—	—
1	13	6.5	3.3	20	26.5	13/1.3	13/6.5	6.5/1.3	6.5/0.65	20/10	26.5/13.2
2	10	5.0	2.5	13	18	10/1.0	10/5.0	5.0/1.0	5.0/0.50	13/6.5	18/9.0
3	9.0	4.5	2.3	13	18	9/0.90	9/4.5	4.5/0.9	4.5/0.45	13/6.5	18/9.0
5	8.0	4.0	2.0	—	12	8/0.80	8.0/4.0	4.0/0.80	4.0/0.40	—	12/6.0
7.5	7.2	3.6	1.8	—	12	7.2/0.72	7.2/3.6	3.6/0.72	3.6/0.36	—	—
10	6.0	3.0	1.5	8.8	—	6.0/0.60	6.0/3.0	3.0/0.60	3.0/0.30	—	—
15	6.0	3.0	1.5	—	—	6.0/0.60	6.0/3.0	3.0/0.60	3.0/0.30	—	—
20	5.0	2.5	1.2	—	—	5.0/0.50	5.0/2.5	2.5/0.50	2.5/0.25	—	—
30	3.3	1.7	—	—	—	3.3/0.33	3.3/1.7	1.7/0.33	1.7/0.17	—	—

NOTE : 1: * Indicates two-step operation.

Specifications Table

60Hz

(Unit: m/min)

Rated load (t)	Standard speed	Low-speed traversing		High-speed traversing	* Dual-speed traversing		
		Slow	Creep (1/4 speed)		Standard / 1/4 speed (4 : 1)	Standard / half speed (2 : 1)	Standard ×2 / standard speed (2 : 1)
1/2	25	12.5	6.0	—	25/6.0	25/12.5	50/25
1	25	12.5	6.0	—	25/6.0	25/12.5	50/25
2	25	12.5	6.0	—	25/6.0	25/12.5	50/25
3	25	12.5	6.0	—	25/6.0	25/12.5	50/25
5	25	12.5	6.0	—	25/6.0	25/12.5	50/25
*7.5	17	12.5 8.5	4.2	25	17/4.2	25/12.5 17/8.5	—
*10	17	12.5 8.5	4.2	25	17/4.2	25/12.5 17/8.5	—
15	17	8.5	4.2	—	17/4.2	17/8.5	—
20	17	8.5	4.2	—	17/4.2	17/8.5	—
*30	17	8.5	4.2	—	17/4.2	17/8.5	—

NOTE : 1: * 7.5, 10 (tons): The upper stage is of the standard type, and the lower stage is of the double rail type.
* 30 (tons): Available only for the double rail type.

Special Specifications Hoist

Explosion-proof Type Hoist

The hoist is designed to have a specific structure available for use where there is a danger of gas explosion.

Specifications

Standard	Type	Rated load (t)	Lift (m)
Ignition group: G_4 Explosion proof: 2	Standard	1,2,3,5	6,12,24,36 (1–3t) 8,12,24,36 (5t)
	Low head	1,2,3,5	6,12
	Double rail	2,3,5	12 (2t) 6,12 (3t) 8,12 (5t)

NOTE : The explosion-proof specifications are also available for rated loads of 1/2, 2.8, 7.5 and 10 (tons) upon request.

For more details, see the Hitachi Explosion-Proof Type Hoists catalogue.

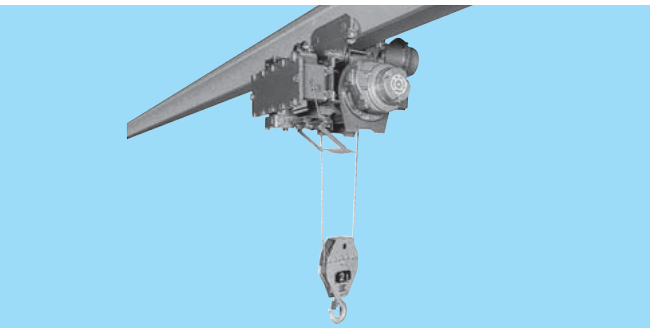

Multi Hook Type Hoist

The hoist has two or four hooks suitable for lifting bars, plates, automobile bodies, and furniture which has a large volume compared with its weight, and which may swing or slant during hoisting.

Twin Hook Type Hoist

Rated load (t)	Lift (m)	Hooking pitch (m)
1–5	6	0.8–1.0

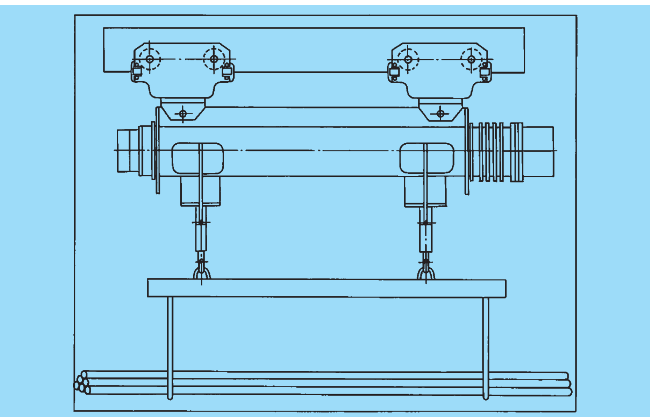

Four Hook Type Hoist

One-drum types, which contain four separate wire ropes, and two-drum types are available (special order products).

Hoist with Upper and Lower Limit Switches

Hoists with upper and lower limit switches (UDS-V_5) are suitable for repeated operation with specified upper and lower load block stop positions.

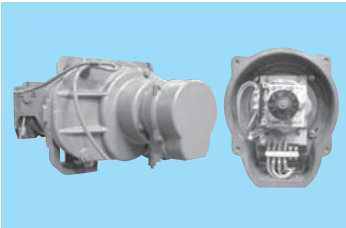

NOTE : The limit switches alone cannot be ordered. They are to be mounted on the body of the hoist.Unless otherwise specified, the upper limit is adjusted to 150mm below the operating point of the upper limit switch, and the lower limit is adjusted on site according to the lifting requirement.

UDS-V_5 Specifications

Contact structure	(Ia, Ib) × 2
Contact capacity	250V, 4A
Upper limit position	Within the lifting distance under the limit lever
Lower limit position	Within the lifting distance from two additional windings of the drum

UDS-V_5 Operation

The VDS-V_5 takes the revolution of the lifting motor taken out from the end bracket in the gear case, and feeds it to the reduction gear inside the UDS-V_5, which turns the cam in order to open and close the limit switch.

Hoist with Load Limiter

The hoist is equipped with an overload prevention device, which detects the lifting motor current and stops lifting when the load is too heavy. It is suitable for preventing dangerous work.

Specification Table

Specifications \ Type		D type load limiter		
		LL-4D	LL-70D	LL-100D
Applicable models	200V class	—	A-series 1–3t V-series 1/2–10t	V-series Over 15t
	400V class	A-series 1t V-series 1/2t	A-series 2–3t V-series 1–30t	—
Electric source		200V 50/60Hz, 220V 60Hz		
Voltage fluctuation		Rated voltage ±10%		
Ambient temperature		−10℃–40℃ (without freeze)		
Approx. weight		3.5kg		
Other		Reset: Return to down position / Time: 0.3 sec or less		

Notes on use
- A dustproof case or anti-corrosion enclosure is required when the hoist is used in a dusty place (e.g. foundry) or a place where corrosive gases are present (e.g. a plating factory, or a factory adjacent to the seaside). If this is the case, please make a separate inquiry.
- Avoid rain when using the hoist in the open air.
- The 400V class power source can be used for the hoist motor, but needs to be adjusted to the voltages specified for use in the above table, for example, a transformer for the supply to the operation circuits and the load limiter.

LL-4D,70D,100D

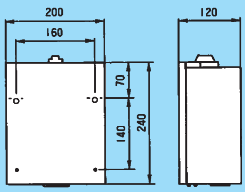

Crane Saddles

Fully applying Hitachi's modern mechanical engineering technology, Hitachi Crane Saddles are designed to withstand full load under severe operating conditions. Excelling in performance, reliability, and durability, Hitachi Crane Saddles will definitely improve your crane's mobility, thus contributing to rationalizing your loading / unloading operations.

These three types of Hitachi Crane Saddled are available :

1. Toprun type

This on-rail-type crane saddle with a wide application range is extensively used for hoist cranes.

2. Suspension type

The suspension type crane saddles can be placed under existing roof beams.

Adopting a shaped-steel frame, the suspension-type saddle is used in combination with the standard rope hoist or the electric chain hoist.

3. Wheel unit for toprun-type saddle

With the driving side and the driven side of the wheel unit forming a pair, it is optionally sold for use with a crab or a traverser.

Toprun Type (Inverted hat cross-section structure)

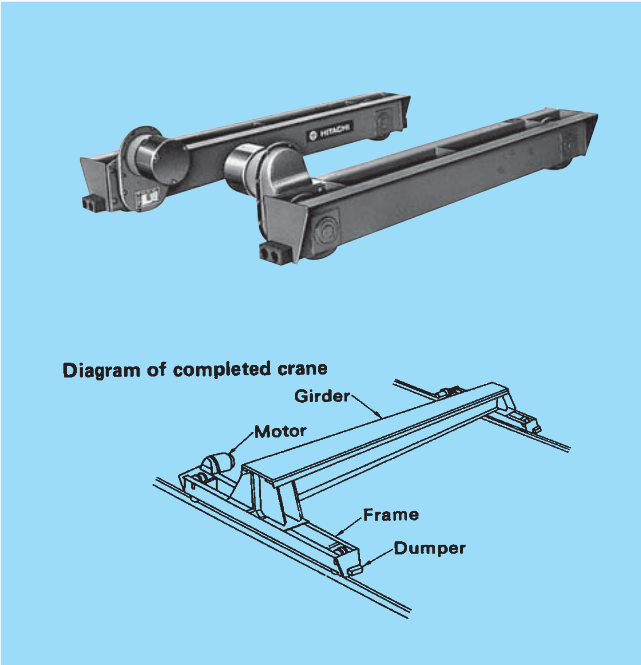

Dimensions

TL5-10

Unit : mm

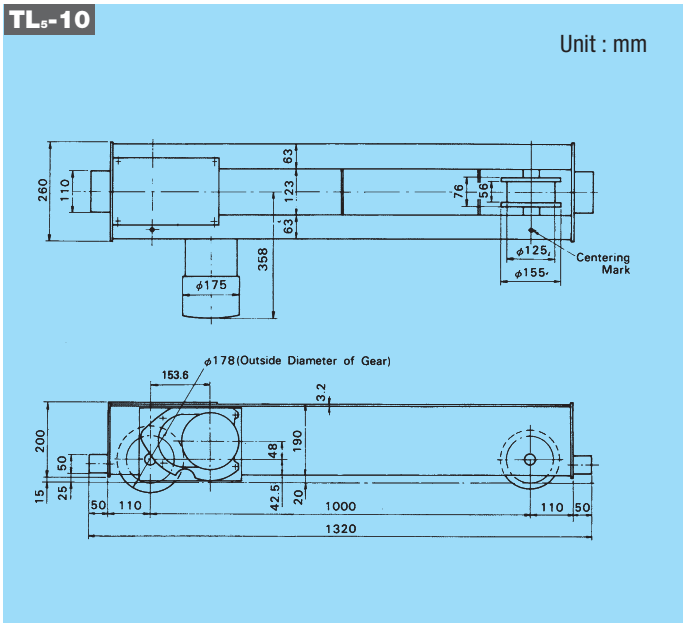

Specifications

Model	TL5-10	TL5-28
Max. wheel load (t)	1.0	2.8
Traveling speed (50/60 Hz)(m/min.)	21/25	
Motor (with brake) (50/60 Hz)(kW)	0.30/0.36×2	
Rating	25% ED 250 Starts/h	
Electric source (3 phase)	200V 50/60Hz,220V 60Hz, 380-400V 50Hz,415V 50Hz,440-460V 60Hz	
Rail (kg)	15	22
Approx. weight (kg)	55×2	90×2

Applicable Range

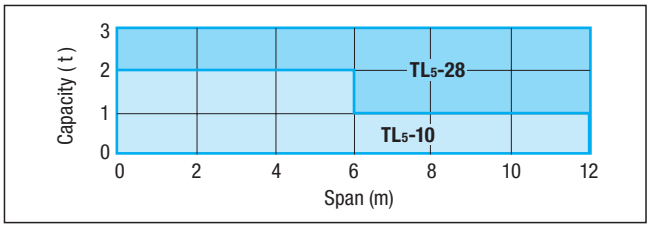

Dimensions

TL5-28

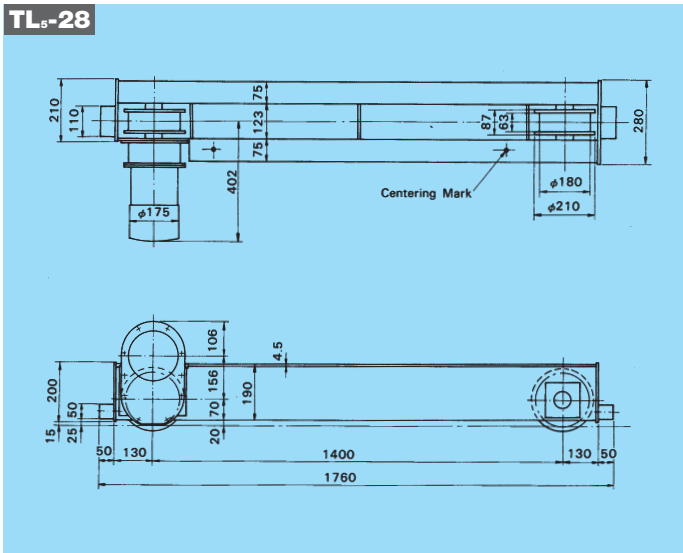

Crane Saddles

Toprun Type (Double channel structure)

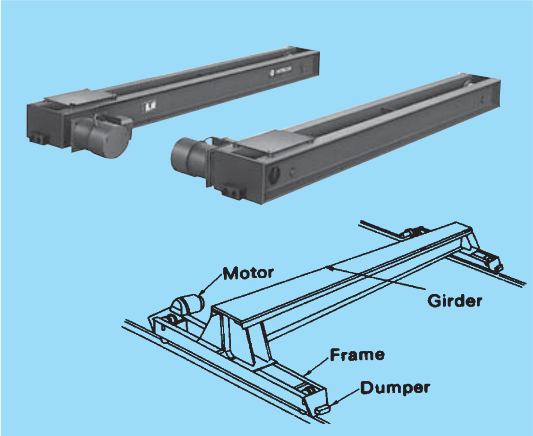

Specifications table

Specifications \ Model	TH5-10	TH5-28	TH5-30	THL5-30	TH5-56	THL5-56	TH-112
Max. wheel load (t)	**1.0**	**2.8**	**3.0**	**3.0**	**5.6(4.0)***	**5.6(4.0)***	**11.2(7.0)***
Traveling speed (50/60 Hz)(m/min.)	21/25	21/25	21/25	21/25	21/25	21/25	25/30
Motor (with brake) (50/60 Hz)(kW)	0.30/ 0.36 ×2	0.30/ 0.36 ×2	0.30/ 0.36 ×2	0.30/ 0.36 ×2	0.70/ 0.84 ×2	0.70/ 0.84 ×2	2.5/ 2.9 ×2
Rating	25% ED 250 Starts/h						
Wheel Dia. (mm)	125	180	180	180	250	250	355
Wheel tread width (mm)	56	63	63	63	70	70	80
Traveling rail (kg)	12,15	15,22	15,22	15,22	22,30	22,30	30,37
Approx. weight (kg)	70×2	110×2	175×2	190×2	250×2	310×2	650×2
Electric source (3 phase)	200V 50/60Hz,220V 60Hz,380-400V 50Hz,415V 50Hz,440-460V 60Hz						

*Figure shown in ( ) is applied for a monorail girder.

Applicable Range

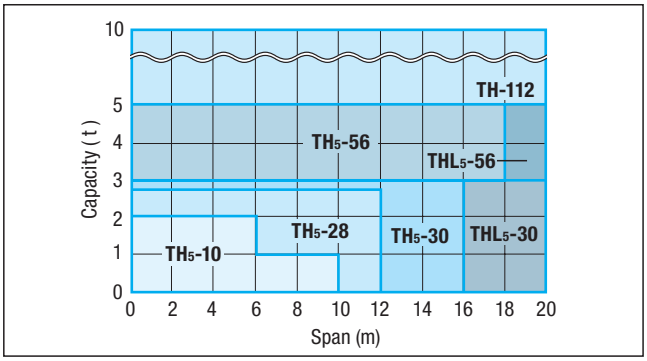

Dimensions

TH5-30

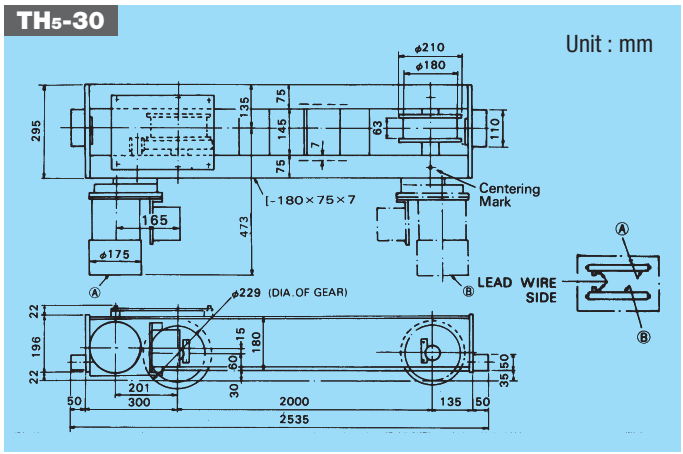

TH5-10

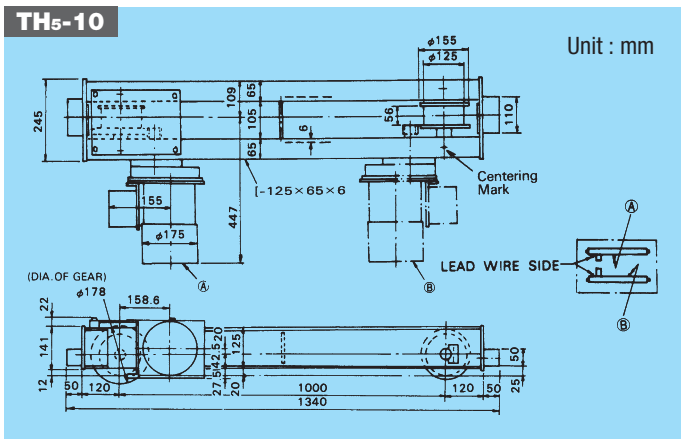

THL5-30

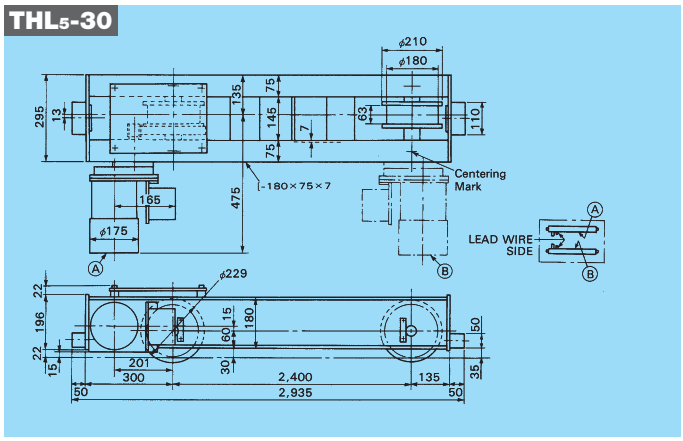

TH5-28

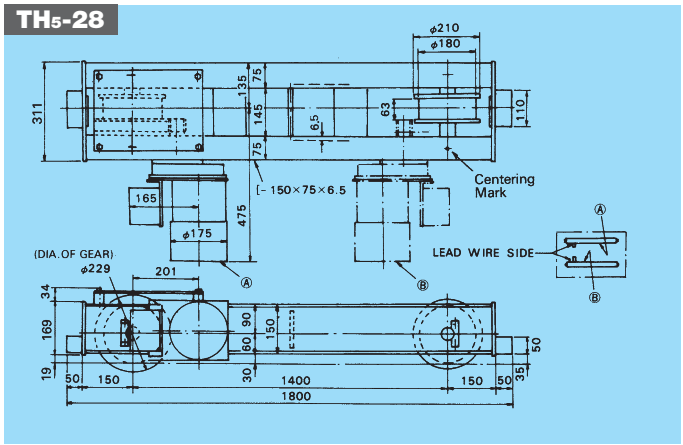

TH5-56

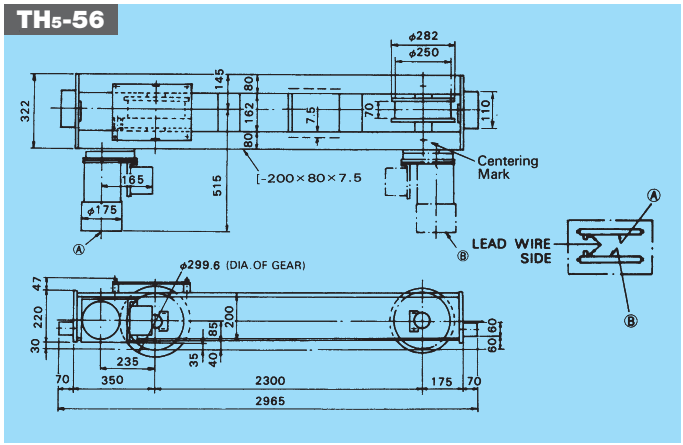

Crane Saddles

THL5-56

Unit : mm

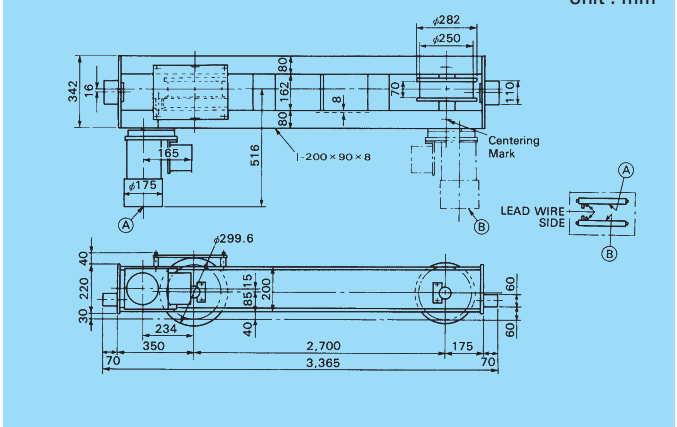

TH-112

Unit : mm

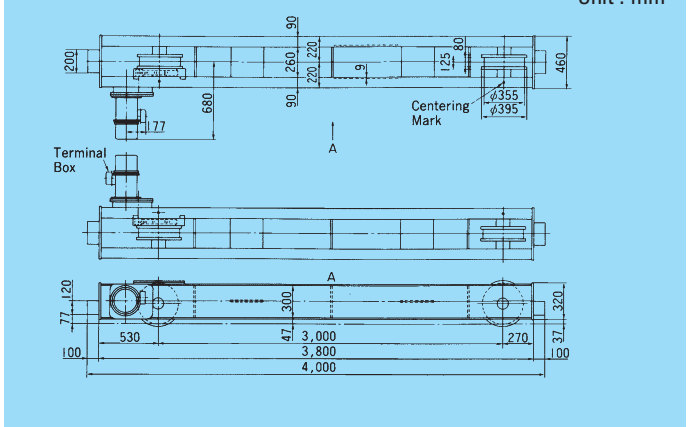

Suspension Type

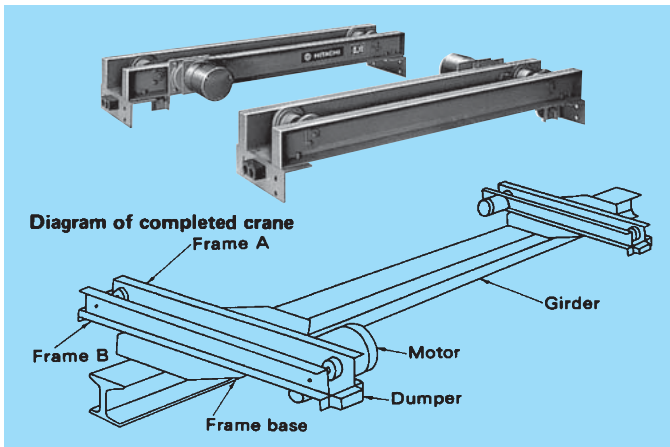

Dimensions

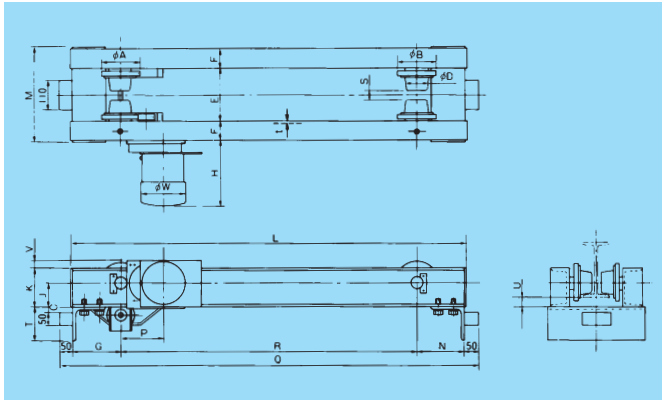

Specifications

Model	SL5-10	SL6-28	SL5-30
Max. wheel load (t)	1.0	2.8	3.0
Traveling speed (50/60Hz)(m/min.)	21/25		
Motor (with brake) (50/60Hz)(kW)	0.30/0.36×2		
Rating	25% ED 250 Starts/h		
Approx. weight (kg)	70×2	105×2	140×2
Electric source (3 phase)	200V 50/60Hz,220V 60Hz, 380-400V 50Hz,415V 50Hz,440-460V 60Hz		

Applicable Range

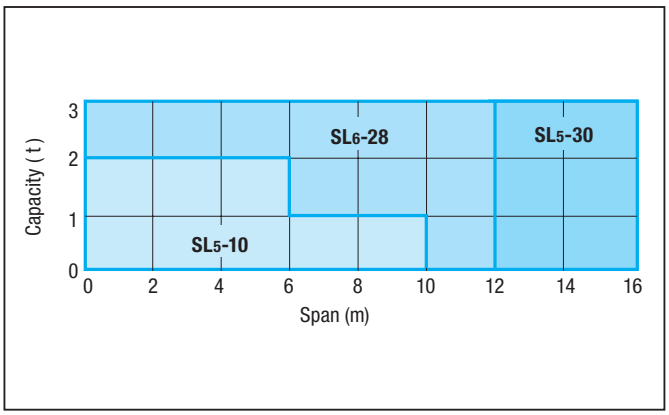

Table of Dimensions

Model		SL5-10	SL6-28	SL5-30
Frame size (mm)		125×65×6	150×75×6.5	180×75×7
Approx. dimensions (mm)	φA	144	163	163
	φB	144	163	163
	C	15	20	20
	φD	76	100	100
	F	65	75	75
	G	147	158	158
	H	294	294	294
	J	73	85	90
	K	125	150	180
	L	1,300	1,720	2,320
	M	350	397	397
	N	147	158	158
	P	153.4	158.3	158
	Q	1,394	1,816	2,416
	R	1,000	1,400	2,000
	T	90	100	100
	V	36	31	10
	φW	175	175	175

I-Beam (mm) \ Dimensions (mm)	E	S	U	E	S	U	E	S	U
200×100×7	158	37	25	167	24	25	167	24	30
250×125×7.5	183	62	22	192	49	23	192	49	28
300×150×11.5	208	87	13	217	74	15	217	74	20
450×175×11				243	99	18	242	99	23

Unless otherwise specified trolley is being assembled so as to meet smudged I-beam size.

Crane Saddle with Creep Speed

- Electric source / 200V 50/60Hz, 220V 60Hz, 380—400V 50Hz, 415V 50Hz, 400—440V 60Hz
- Rating / 30 min (based on JIS C9620)
- Starting frequency and duty factor / 250 starts/h, 25% ED
- Protective structure / Dustproof type, indoor specifications

Standard Specification Table

Model			Top run type								Suspension type		
			TH type						TL type		SL type		
Type			THC5-10	THC5-28	THC5-30	THLC5-30	THC5-56	THLC5-56	TLC5-10	TLC5-28	SLC5-10	SLC5-28	SLC5-30
Max. wheel load (t)			1	2.8	3		5.6*(4)		1	2.8	1	2.8	3
Max. span (m)			10	12	16	20	18	20	10	12	10	12	16
Travelling speed (m/min) Standard / creep		50Hz	21/5								21/5		
		60Hz	25/6								25/6		
Motor	kW Standard / creep	50Hz	0.30/0.08×2				0.70/0.18×2		0.30/0.08×2		0.30/0.08×2		
		60Hz	0.36/0.09×2				0.84/0.21×2		0.36/0.09×2		0.36/0.09×2		
	No. of poles, standard / creep		2/8								2/8		
Rating			25% ED, 250 starts/h								25% ED, 250 starts/h		
Wheel diameter (mm)			ϕ125	ϕ180			ϕ250		ϕ125	ϕ180	ϕ76	ϕ100	
Wheel material			FCD heat treatment						FCD		S45C heat treatment		
Applicable rail			12, 15kg	15, 22kg			22, 30kg		15kg	22kg	200×100×7 250×125×7.5 300×150×11.5	200×100×7 250×125×7.5 300×150×11.5 450×175×11	
Approx. weight (kg)			80×2	120×2	185×2	200×2	260×2	320×2	65×2	100×2	80×2	115×2	150×2

NOTES : 1 : Only anti-corrosion coating is applied on the body.
2 : THC5-56, THLC5-56 and THMC5-45 are for the double rail hoist.
3 : (4) indicates the maximum wheel load for the monorail girder.

Toprun Type

Applicable Range

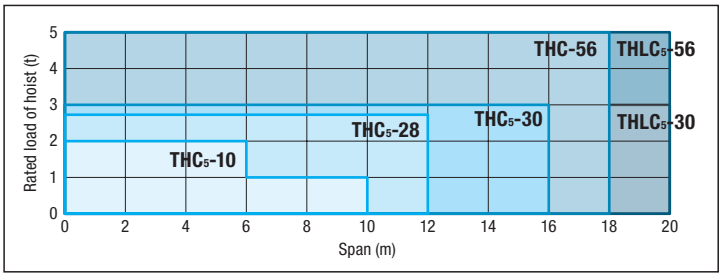

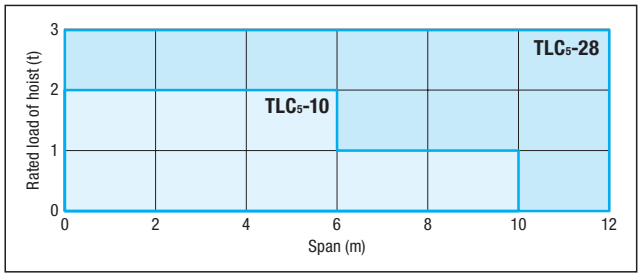

NOTE : 1. The above drawing shows an outline of the model selection.
In practice, wheel load calculation including the girder is required.

Suspension Type

Applicable Range

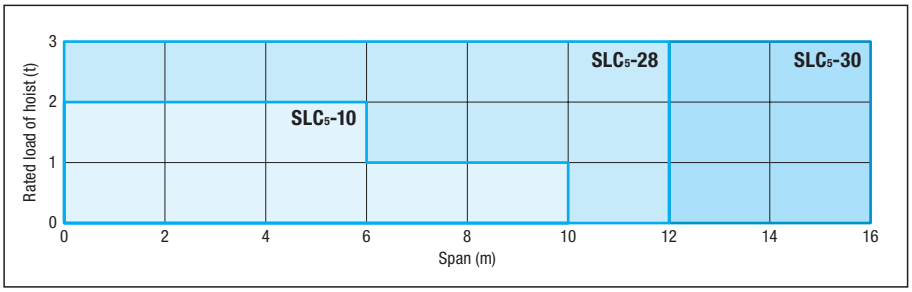

NOTE : 1. The above drawing shows an outline of the model selection. In practice, wheel load calculation including the girder is required.

Wheel Unit for Toprun Type Saddle

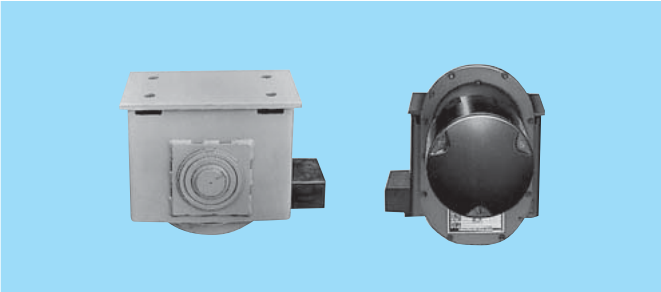

Dimensions

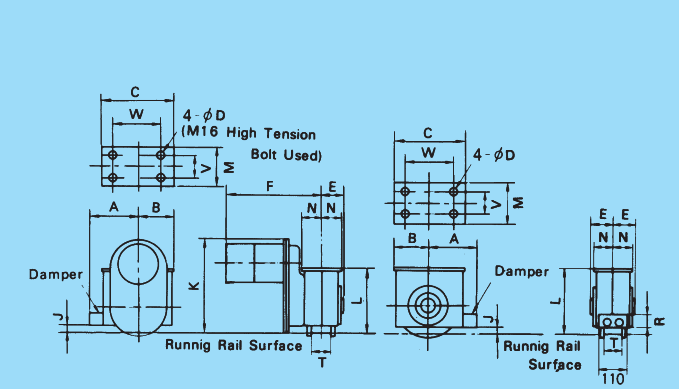

Unit of Drive Wheel side. Unit of Driven Wheel side.

Specifications

Model	TLU5-28	TLU5-56
Max. wheel load (t)	2.8	5.6
Traveling speed (50/60Hz)(m/min.)	21/25	21/25
Motor (with brake) (50/60Hz)(kW)	0.30/0.36	0.70/0.84
Rating	25% ED 250 Starts/h	
Electric source (3 phase)	200V 50/60Hz,220V 60Hz, 380-400V 50Hz,415V 50Hz,440-460V 60Hz	
Rail (kg)	22	30

Table of Dimensions

Type		TLU5-28	TLU5-56
Approx. dimensions (mm)	A	180	230
	B	135	170
	C	270	340
	φD	18	22
	E	81	95
	F	410	450
	J	25	45
	K	352	372
	L	240	290
	M	140	190
	N	70	95
	R	50	60
	V	80	100
	W	190	230
Approx.weight	(kg)	65	125
Wheel tread (mm)	T	63	70

Applicable Range

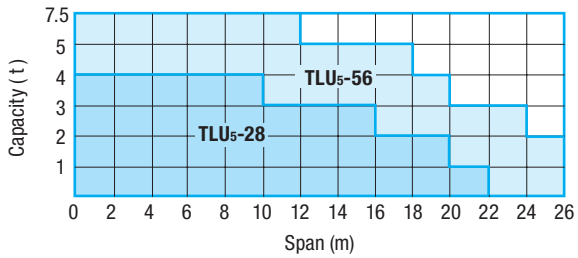

Wheel Load Calculation for Traversers and Crabs

TRAVERSER

$$\text{Wheel Load} = K_1 \left[\frac{W_1}{N} + \frac{W + W_2}{N/2} \times \frac{L - L_1}{L} \right]$$

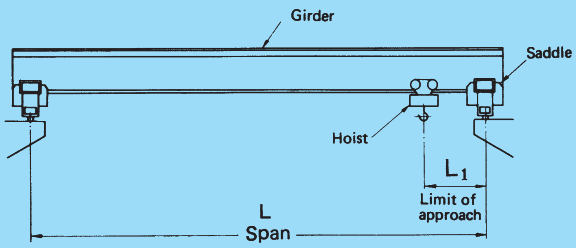

CRAB

$$\text{Wheel Load} = K_2 \left[\frac{W + W_2}{N} \right]$$

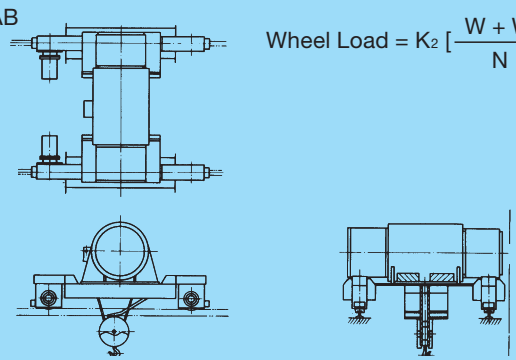

N : Number of Crane Wheels=4
W: Rated Load (t)
W_1 : Weight of Crane (t)
W_2 : Weight of Hoist (t)
L : Span (m)
L_1 : Limit of Approach (m)
K_1 : Impact Coefficient (1.2)
K_2 : Impact Coefficient (1.6)

Specifications are subject to change without notice.

Wheel Unit for Gantry Crane Saddle

- The wheel unit for Hitachi's gantry crane saddle is a compact unit with integrated structure.
- It can be used not only for gantry cranes but also for traversing equipment of overhead traveling cranes.

GU-45

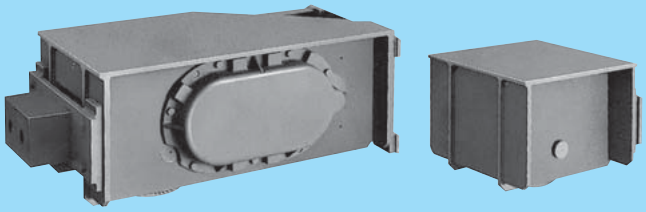

Driving Side　　Trailing Side

Standard Specifications

Model	GU-45
Max. Wheel Load	4.5
Traveling Speed (50/60Hz)(m/min.)	25 / 30
Motor (50/60Hz) (kW)	1.2/1.5 (With brake)
Motor Pole Number	4
Rating	25% ED 250 Starts / h
Electric Source (3 phase)	200V 50/60Hz,220V 60Hz, 380-400V 50Hz,415V 50Hz,440-460V 60Hz
Brake Torque (TB/TM)	0 – 60 %
Traveling Rail (kg)	22 , 30
Approx Weight (kg)	340

*The coating of the main body consists of only the rust proof coating.

Applicable Range

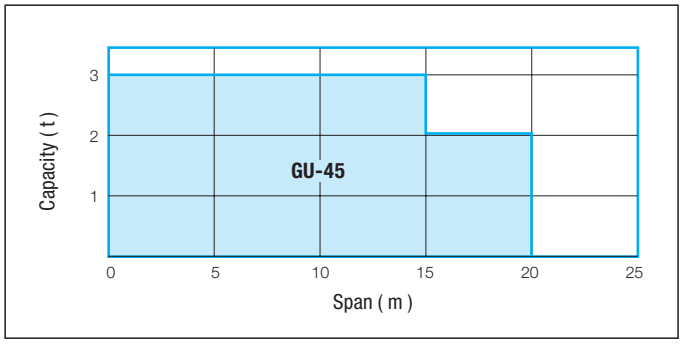

*If the span exceeds 20m there is danger of the motor lacking output by the influence of the wind.
Therefore, the maximum span is limited to 20m.

Dimensions

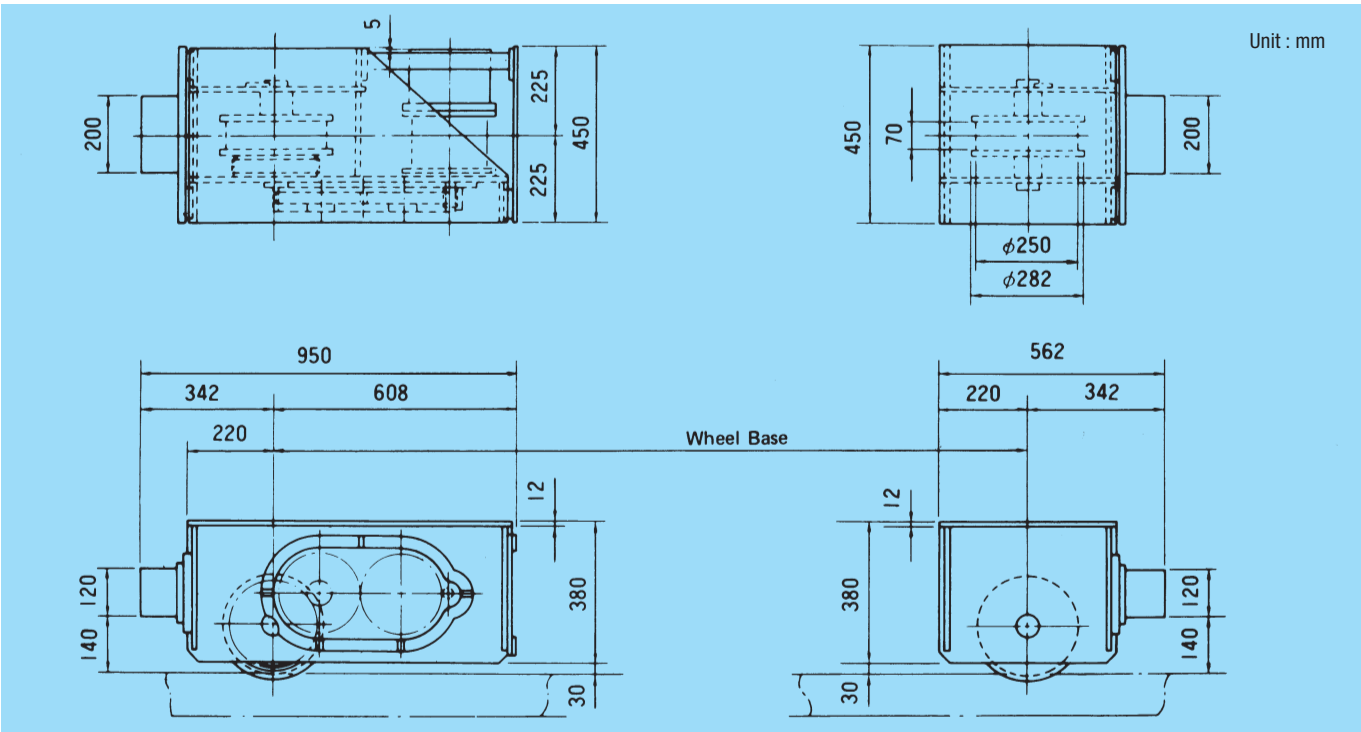

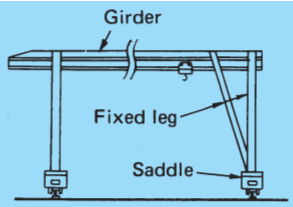

K_1 : Impact Coefficient (1.2)

W_2 : Weight of Hoist (t)

W_3 : Weight of Girder (t)

W_4 : Weight of Saddle (t)

W_5 : Weight of Fixed Leg (t)

W : Rated Load (t)

$$\text{Wheel Load} = K_1 \left(\frac{W_3 + W_4}{4} + \frac{W_5 + W + W_2}{2} \right)$$

Electrical Parts for Crane Saddle

Geared Motor

- By exclusive designing for the crane saddle, the flange dimension and fit joint diameter are designed to be convenient for attachment. The types of units range from 0.4–3.7 kW, and high speed type and low speed type are made in series.

Application

- For saddle of overhead crane with hoist.(Two-motor drive system)
- For traversing and traveling of crab type overhead crane.
- For saddles of gantry crane (Two-motor drive system)

(When employed for gantry cranes and so on for outdoor operation, ascertain that an outdoor cover is used.)

Besides the above, as special geared motors, there are low speed geared motors (50/60min^{-1}), variable speed geared motors, etc., so please feel free to make inquiries.

Geared Motor

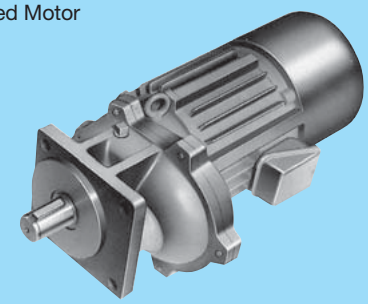

Standard Specifications Table

Output(kW)	Model (Low speed/High speed)	Voltage Frequency	Output Speed (min^{-1}) 50Hz Low Speed	50Hz High Speed	60Hz Low Speed	60Hz High Speed	Rating	Tolerable Starting Frequency (times/hr.)	Type From Motor	Type From Brake	Brake Torque (%)
0.4	(N)YEGEH - 0.4/(N)YJGEH - 0.4	3 ϕ 200V 50/60Hz, 220V 60Hz, 380-400V 50Hz, 415V 50Hz, 440-460V 60Hz	75	160	90	190	S3 25%	120	YTOG-K	MS-HB	40
0.75	(N)YEGEH - 0.75/(N)YJGEH - 0.75		75	160	90	190		100		MS-HB	
1.5	(NB)YEGEH - 1.5/(NB)YHGEH - 1.5		75	120	90	145		95		MS-HB	
2.2	(N)YEGEH - 2.2/(N)YHGEH - 2.2		75	120	90	145		90	YTFOG-K	MS-FE	
3.7 (Low Speed Only)	(N)YEGEH - 3.7/ ————		75	—	90	—		90 (Low-Speed Only)		MS-FE	

NOTES :

1. The tolerable starting frequency is the value which makes the load GD^2 (flywheel effect) 10 times that of motor GD^2
   In case of usage in which the load GD^2 exceeds the standard value, please make inquiries.
2. The joint usage of cushion starter or primary resistance will prevent the shaking of the load, and alleviate the impact shock, so always use such devices.
3. The models having output of 2.2 kW and 3.7 kW are equipped with temperature relays which detect the temperature of motor coil directly.
   Models having output of 0.4 kW–1.5kW have no temperature relays. However , if you desire to have temperature relays equipped, they will be equipped to order.

Cushion Starter

- This will alleviate the impact at the time of starting of the geared motor for crane saddles. It is possible to adjust the starting (low voltage) time from 2 seconds to 10 second. The starting torque can be varied continuously over a broad range merely by turning the variable resistance slider for adjustment. Since this is all electronic type without any moving parts, the reliability is extremely high and maintenance is practically not required.

Cushion Starter

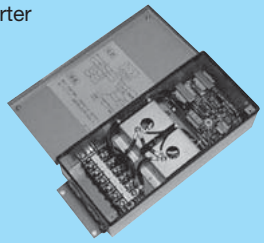

Performance

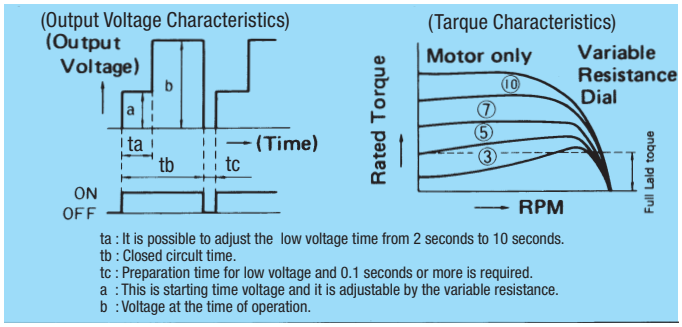

ta : It is possible to adjust the low voltage time from 2 seconds to 10 seconds.
tb : Closed circuit time.
tc : Preparation time for low voltage and 0.1 seconds or more is required.
a : This is starting time voltage and it is adjustable by the variable resistance.
b : Voltage at the time of operation.

Specification Table

Model	Maximum Motor Output Applied	Electric Source	Dimension	Weight
HQ-0C	1.5 kW	190-230V 50/60 Hz	Fig. A	3 kg
HQ-2C	3.7 kW			
HQ-4C	7.5 kW			
HQ-1HC	3 kW	380-460V 50/60 Hz		
HQ-4HC	7.5 kW			

NOTES :
(1) HQ-0C—HQ-4C and HQ-1HC—HQ-4HC are planned production models.
(2) As for the applied motor , so long as the total output is less than the applied maximum motor output , more than one motor may be operated.

Dimensions

Fig. A

Unit : mm

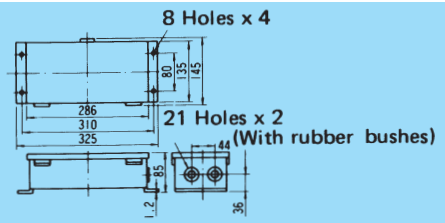

For Installing the Hitachi Hoist

Size of I-Beam and Max. Allowable Span

Standard I-beam sizes and marked with ○.
Hitachi hoists are supplied, based on the I-beam size marked with ●, unless otherwise specified.

Capacity (t)	Max. allowable I-beam span (m)								
	Dimensions of I-beam employed (mm)								
	150×75×5.5	200×100×7	250×125×7.5	250×125×10	300×150×11.5	350×150×12	400×150×12.5	450×175×11	600×190×13
1/2	○3.0	●4.5	○7.0	○7.9					
1		○3.5	●5.4	○6.4	○8.6	○9.9			
2		○2.3	●4.0	○4.9	○6.9	○8.0	○8.5		
3			○2.9	○3.8	●5.6	○6.4	○7.1	○8.0	
5					●4.1	○4.9	○5.6	○6.2	
7.5								●4.5	○7.1
10								●3.9	○6.1
15								●3.1	○4.9
20								●2.7	○4.3

NOTES : 1.Values shown in above list are applied for a telpher.
2.Max. allowable I-beam span is decided by capacity of a hoist , without affected by type of a hoist or a trolley.

Traveling Rail Stopper

This is a simple construction where two angle steels are installed on both sides of the I-beam. Rubber should be applied to the stopper surfaces to soften shocks when the hoist strikes the stopper surfaces.

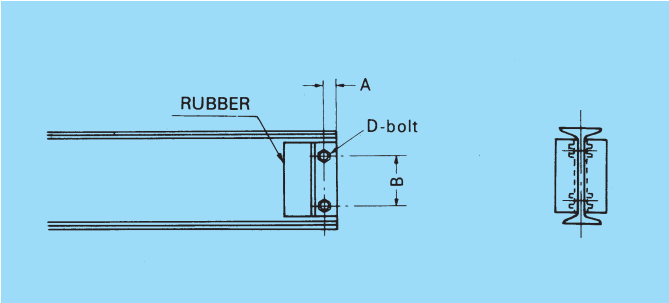

I-beam (mm)	150×75	200×100	250×125	350×150	450×175
Angle steel (mm)	50×50×6			65×65×6	
A (mm)	22			30	
B (mm)	70	105	110	190	280
D (mm)	M10	M16	M16	M20	M20

For Installing the Hitachi Hoist

Stopper For Double–Rail Type Hoist

Set the stoppers on traveling rails so that both side of the wheel contacts the stoppers simultaneously.
The dimension “a” must cover more than half of the wheel diameter.

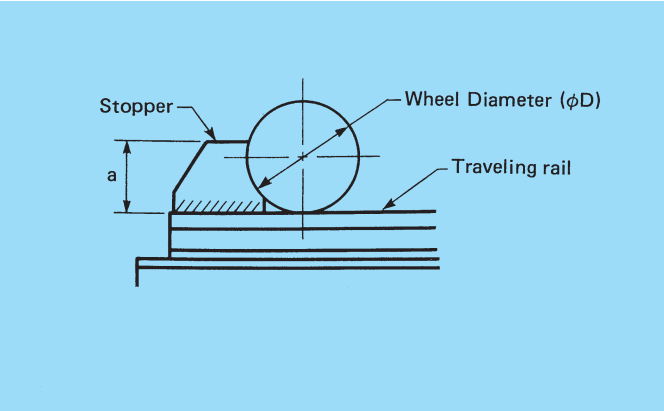

(mm)

Capacity (t)	Wheel diameter (ϕD)	a
2,3,5	160	40
7,5,10	195	50
15,20	250	65
30	350	90

The self-adjusting center core, as shown in the figure below, is adopted on the driven side so that the four wheels correctly contact the rail. Therefore, height difference between the rails causes eccentric of the axle as illustrated below . In consideration of this eccentric amount, place the stoppers so that both side of the wheel contacts the stoppers simultaneously.

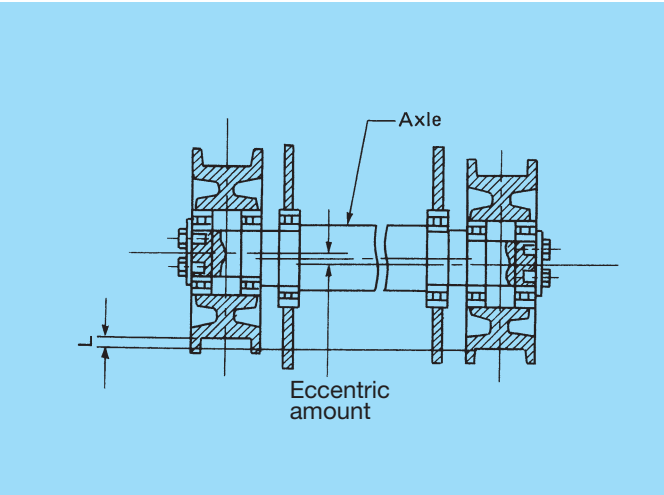

Capacity (t)	Max.L (mm)
2, 3, 5	10
7.5, 10	15
15, 20	15
30	15

For Installing The Hitachi Hoist

Power cable allowable length

The power cable allowable length for the standard specification is shown in the following table.
When extending the power cable or relay cable, make a selection after referring to the following table.

A-series

Power Source	Capacity (t)	Permissible Length of Power Source Cable (m) Nominal Sectional Area of Conductor (mm²)						Minimum Fuse Capacity (A)
		0.75	1.25	2	3.5	5.5	8	
220V 50Hz	1	24	40	64	112	–	–	15
	2	–	–	38	66	103	–	20
	3	–	–	–	42	65	94	40
380–415V 50 Hz	1	67	111	177	309	–	–	10
	2	–	67	107	187	293	–	15
	3	–	41	65	113	177	257	30

V-series (200V class)

Capacity (t)	Hoist Motor (kW)	Power Source	Permissible Length of Power Source Cable (m) Nominal Sectional Area of Conductor (mm²)													
			0.75	1.25	2	3.5	5.5	8	14	22	30	38	60	80	100	125
1/2	1.0	200V 50Hz	28	47	76	133	209									
	1.2	200V 60Hz	13	23	37	65	102									
		220V 60Hz	28	47	75	132	207									
1	1.9	200V 50Hz	–	25	40	71	112	163	285							
	2.3	200V 60Hz	–	12	20	35	55	80	140							
		220V 60Hz	–	25	40	70	111	161	282							
2	2.9	200V 50Hz	–	–	〈22〉	38	59	86	151	237						
	3.5	200V 60Hz	–	–	〈10〉	18	28	41	72	113						
		220V 60Hz	–	–	〈21〉	35	55	81	142	223						
(2.8) 3	4.2(4.0)	200V 50Hz	–	–	–	〈31〉	48	70	123	193						
	5(4.8)	200V 60Hz	–	–	–	〈15〉	23	34	60	94						
		220V 60Hz	–	–	–	〈30〉	46	66	116	182						
5	5.9	200V 50Hz	–	–	–	–	–	48	84	132	180	228				
	7	200V 60Hz	–	–	–	–	–	23	40	63	86	109				
		220V 60Hz	–	–	–	–	–	46	81	127	173	219				
7.5	7.9	200V 50Hz	–	–	–	–	–	–	24	37	51	65	103	138		
	9.5	200V 60Hz	–	–	–	–	–	–	27	42	58	73	116	155		
		220V 60Hz	–	–	–	–	–	–	26	41	56	72	113	151		
10	8.8	200V 50Hz	–	–	–	–	–	–	24	37	51	65	103	138		
	10.5	200V 60Hz	–	–	–	–	–	–	27	42	58	73	116	155		
		220V 60Hz	–	–	–	–	–	–	26	41	56	72	113	151		
15	6.7×2	200V 50Hz	–	–	–	–	–	–	–	25	34	43	68	91	113	142
	8×2	200V 60Hz	–	–	–	–	–	–	–	28.5	39	49	78	103	129	162
		220V 60Hz	–	–	–	–	–	–	–	27	36	46	73	97	121	150
20	7.5×2	200V 50Hz	–	–	–	–	–	–	–	21	28	36	56	74	173	136
	9×2	200V 60Hz	–	–	–	–	–	–	–	23	32	40	63	84	105	132
30		220V 60Hz	–	–	–	–	–	–	–	23	31	39	62	82	102	128

V-series (400V class)

Capacity (t)	Hoist Motor (kW)	Power Source	Permissible Length of Power Source Cable (m) Nominal Sectional Area of Conductor (mm²)													
			0.75	1.25	2	3.5	5.5	8	14	22	30	38	60	80	100	125
1/2	1.0	380~415V 50Hz	54	90	144	252										
	1.2	400V 60Hz	26	46	74	130										
		440V 60Hz	56	94	150	264										
1	1.9	380~415V 50Hz	–	48	76	133	209									
	2.3	400V 60Hz	–	24	40	70	110									
		440V 60Hz	–	50	80	140	222									
2	2.9	380~415V 50Hz	–	–	41	72	113	165								
	3.5	400V 60Hz	–	–	36	56	82	144								
		440V 60Hz	–	–	70	110	162	284								
(2.8) 3	4.2(4.0)	380~415V 50Hz	–	–	33	58	91	132								
	5(4.8)	400V 60Hz	–	–	–	46	68	120								
		440V 60Hz	–	–	–	92	132	232								
5	5.9	380~415V 50Hz	–	–	–	40	62	91	159							
	7	400V 60Hz	–	–	–	–	31	46	80	126						
		440V 60Hz	–	–	–	–	63	92	162	254						
7.5	7.9	380~415V 50Hz	–	–	–	–	–	–	45	71	97	123				
	9.5	400V 60Hz	–	–	–	–	–	–	54	84	116	146				
		440V 60Hz	–	–	–	–	–	–	52	82	112	144				
10	8.8	380~415V 50Hz	–	–	–	–	–	–	45	71	97	123				
	10.5	400V 60Hz	–	–	–	–	–	–	54	84	116	146				
		440V 60Hz	–	–	–	–	–	–	52	82	112	144				
15	6.7×2	380~415V 50Hz	–	–	–	–	–	–	–	47	64	82	129			
	8×2	400V 60Hz	–	–	–	–	–	–	–	57	78	98	156			
		440V 60Hz	–	–	–	–	–	–	–	54	72	92	146			
20	7.5×2	380~415V 50Hz	–	–	–	–	–	–	–	40	54	63	108			
	9×2	400V 60Hz	–	–	–	–	–	–	–	46	64	80	126			
30		440V 60Hz	–	–	–	–	–	–	–	46	62	78	124			

Standards and Applied Class to the Hitachi Hoists

Code in Each Standard	Structural Code for Cranes (Japan)		A	B	C	D	E	F
	JIS C 9620 JIS B 8822-1		M3	M4	M5	M6	M7	M8
	FEM 9.511		1Bm	1Am	2m	3m	4m	5m
(1) Total Operating Time (Lifetime at full load h)			h ≦ 400	400 < h ≦ 800	800 < h ≦1600	1600< h ≦ 3200	3200< h ≦ 6300	6300< h ≦ 12500
Hitachi's Specification	V-series Hoists		●					
	A-series Hoists		●					
Load Condition	Load Ratio		Mean operating hour per day					
Light	K≦0.5		≦ 2	≦4	≦8	≦16	≧16	—
Medium	0.5<K≦0.63		≦ 1	≦2	≦4	≦8	≦16	≧16
Heavy	0.63<K≦0.8		≦ 0.5	≦1	≦2	≦4	≦8	≦16
Severe	0.8<K≦1		≦ 0.25	≦0.5	≦1	≦2	≦4	≦8
(2)Repetitive Rating	Duty (% ED)		25	30	40	50	60	60
	Max. Starting Frequency		150	180	240	300	360	360
Hitachi's Specification	V-series Hoists		○		(●) 40% ED, 400 Starts/h			
	A-series Hoists		○		(●) 25% ED, 250 Starts/h			
(3)Ratio of Wire Rope Dia. (d) to Sheave (D)	FEM	Drum	14	16	18	20	22.4	25
		Sheave	16	18	20	22.4	25	28
		Equalizer sheave	12.5	14	14	16	16	18
	JIS Structural Code for Cranes	Drum	14	16	18	22.4	28	35.5
		Sheave	16	18	20	25	31.5	40
		Equalizer sheave	**10**	**10**	**10**	**10**	**12.5**	**14**
Hitachi's Specification	V-series Hoists		Applicable to JIS (NA to FEM)					
	A-series Hoists		Applicable to JIS (NA to FEM)					

Applied Class to FEM standard

(1) V-Series WR Hoists	Between 2m and 3m
(2) A-Series WR Hoists	Between 1Am and 2m

＊ Total operating time, repetitive rating are considered for the classification.
Ratio of the wirerope diameter to the sheave one, so called D/d, is exempted from the judgment, because the idea for the safety is different and the values are greatly different between JIS and FEM standard.

Memo

Network

Hitachi Industrial Equipment Systems Co., Ltd. meets customers' needs through the total network which can supply speedy design, production, sales, service and engineering for industrial equipment and systems.

Global Sales Network

Asia

China

Hitachi East Asia Ltd.
4th Floor, North Tower World Finance Centre,
Harbour City, Canton Road,
Tsim Sha Tsui, Kowloon Hong Kong.
TEL: +852 2735-9218
FAX: +852 2735-6793

(Shanghai Office)
(Hitachi (Shanghai) Trading Co., Ltd.)
18th Floor, Rui Jin Building No. 205,
Maoming Road (S) Shanghai, 200020
TEL: +86 (21) 6472-1002
FAX: +86 (21) 6472-4990

(Taiwan Hitachi Asia Pacific Co., Ltd.)
3rd Floor, Hung Kuo Building No. 167
Tun-Hwa North Road, Taipei (105) Taiwan
TEL: +886 (2) 2718-3666
FAX: +886 (2) 2718-8180

Indonesia

Hitachi Asia Ltd. (Jakarta Office)
10th Floor, Mid Plaza 1, JL. Jend.
Sudirman Kav. 10-11, Jakarta 10220
TEL: +62 (21) 574-4313
FAX: +62 (21) 574-4312

Singapore

Hitachi Asia Ltd.
24 Jurong Port Road, #03-05 Office Block,
CWT Distripark Singapore 619097
TEL: +65 (6305) 7400
FAX: +65 (6305) 7401

Thailand

Hitachi Asia (Thailand) Co., Ltd.
18th Floor, Ramaland Building, 952
Rama IV Road Bangrak, Bangkok 10500
TEL: +66 (2) 632-9292
FAX: +66 (2) 632-9299

India

Hitachi India Trading Pvt. Ltd.
Units 304-306, 3rd Floor ABW Elegance Tower
Jasola District Centre New Delhi-110025, India
TEL: +91 (11) 4060-5252
FAX: +91 (11) 4060-5253

Philippine

Hitachi Asia Ltd. Philippine Branch
17th Floor, Oledan Square, 6788
Ayala Avenue, Makati City Philippines 1226
TEL: +63 (2) 886-9018
FAX: +63 (2) 887-3794

Information in this brochure is subject to change without notice.

Hitachi Industrial Equipment Systems Co., Ltd.

For further information, please contact your nearest sales representative.

Registration number: JACO-EC99J2009
Registration date: July 22, 1996

The Energy Saving Systems Division (Taga Division) of Hitachi Industrial Equipment Systems Co., Ltd. obtained ISO 14001 certification, an international standard for environmental management systems.

Registration number: JQA-QMA 12087
Registration date: April 1, 2005

The Energy Saving Systems Division (Taga Division) of Hitachi Industrial Equipment Systems Co., Ltd. obtained international standard ISO 9001 certification for the quality assurance of the hoist motor block contained in this brochure.

Printed in Japan (H) **SH-E090W** 0908